Assembly **Instructions**

Hello, Welcome to your new **SmartDesk**. We hope that you enjoy our product. We have worked very hard to ensure a simple and seamless experience. If you need any assistance or run into any problems, please do not hesitate to contact a Cemtrex team member by phone, email, or online.

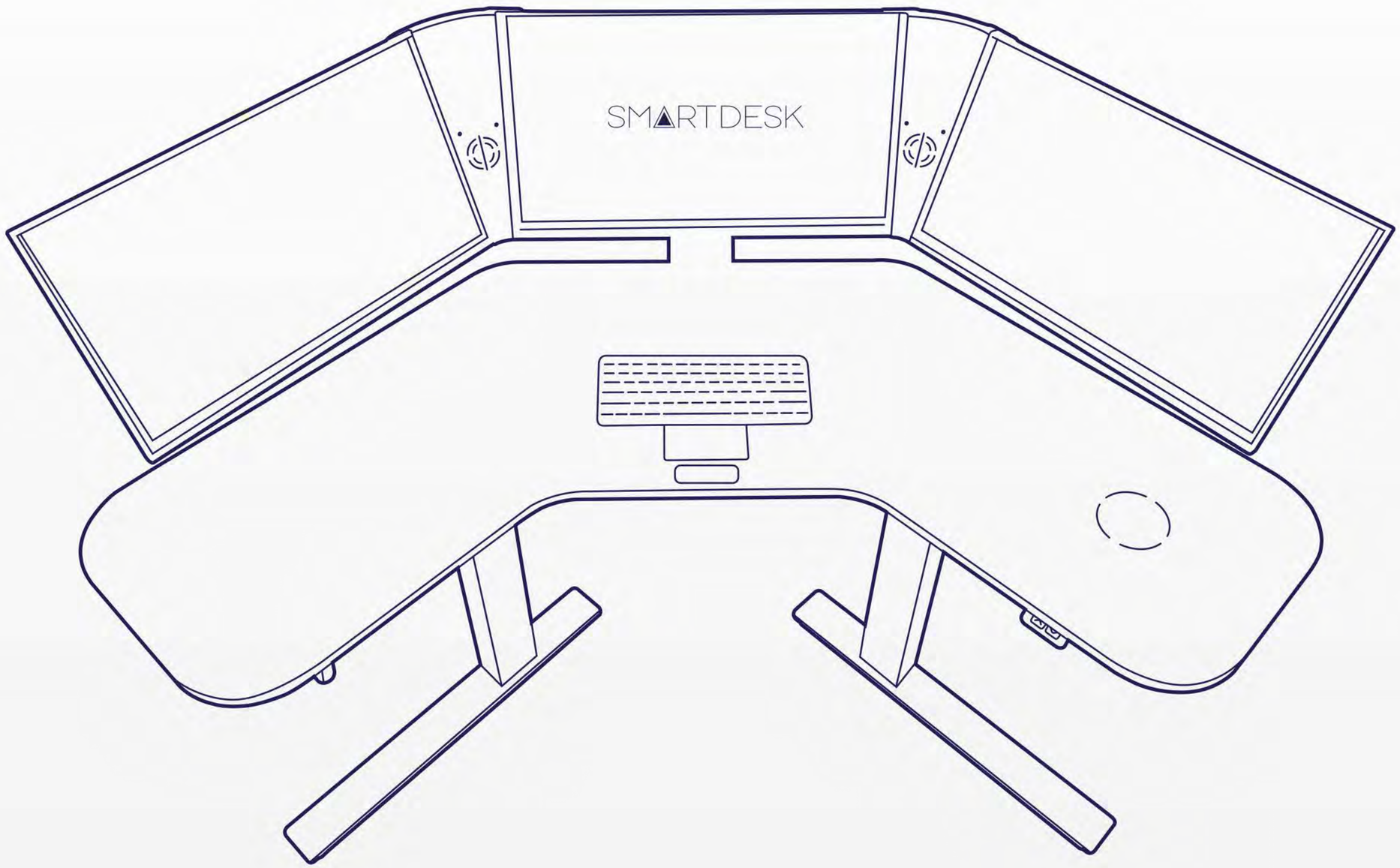

ASSEMBLY COMPONENTS

Box 1

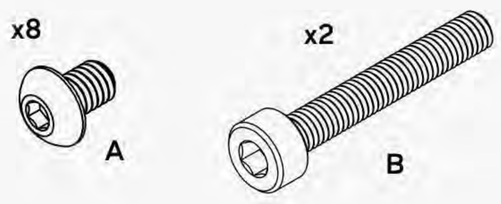

x1 Power Cable

x1 Allen keys

x1 USB A-Male to B-Mini

Box 2

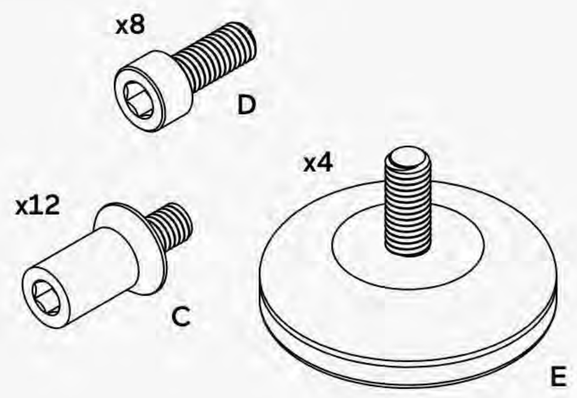

Note: Some hardware packaging may not be labelled

Box 3

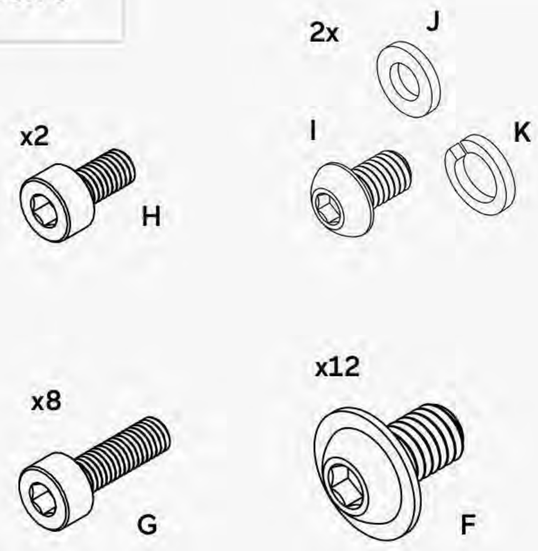

SELECTED BOX CONTENTS

Box 1

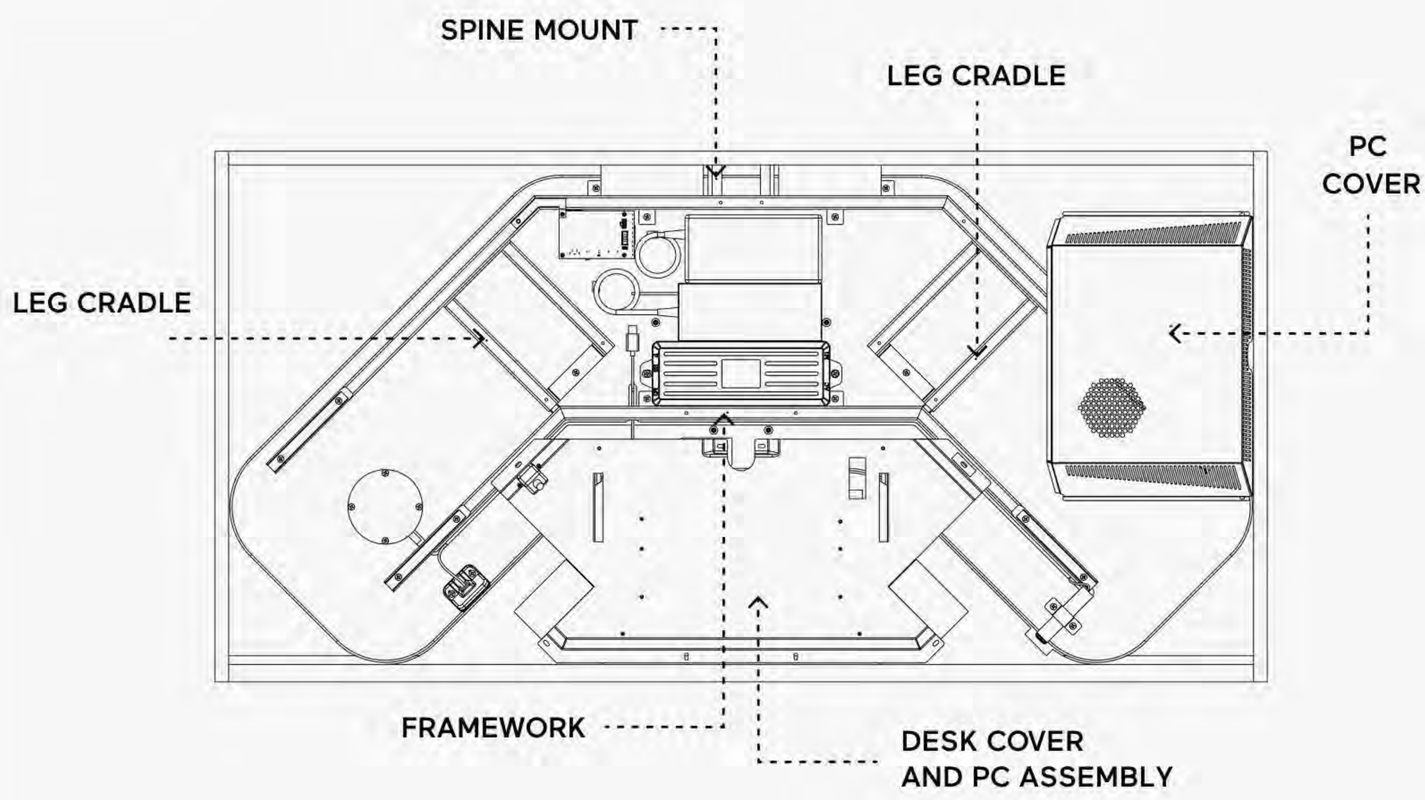

Box 2

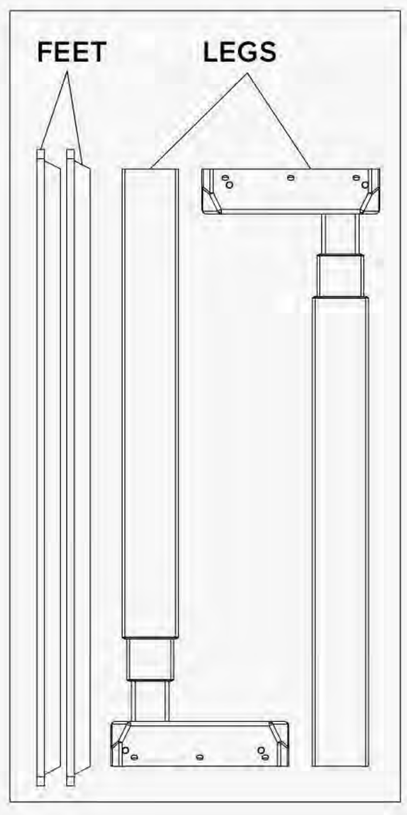

Box 3

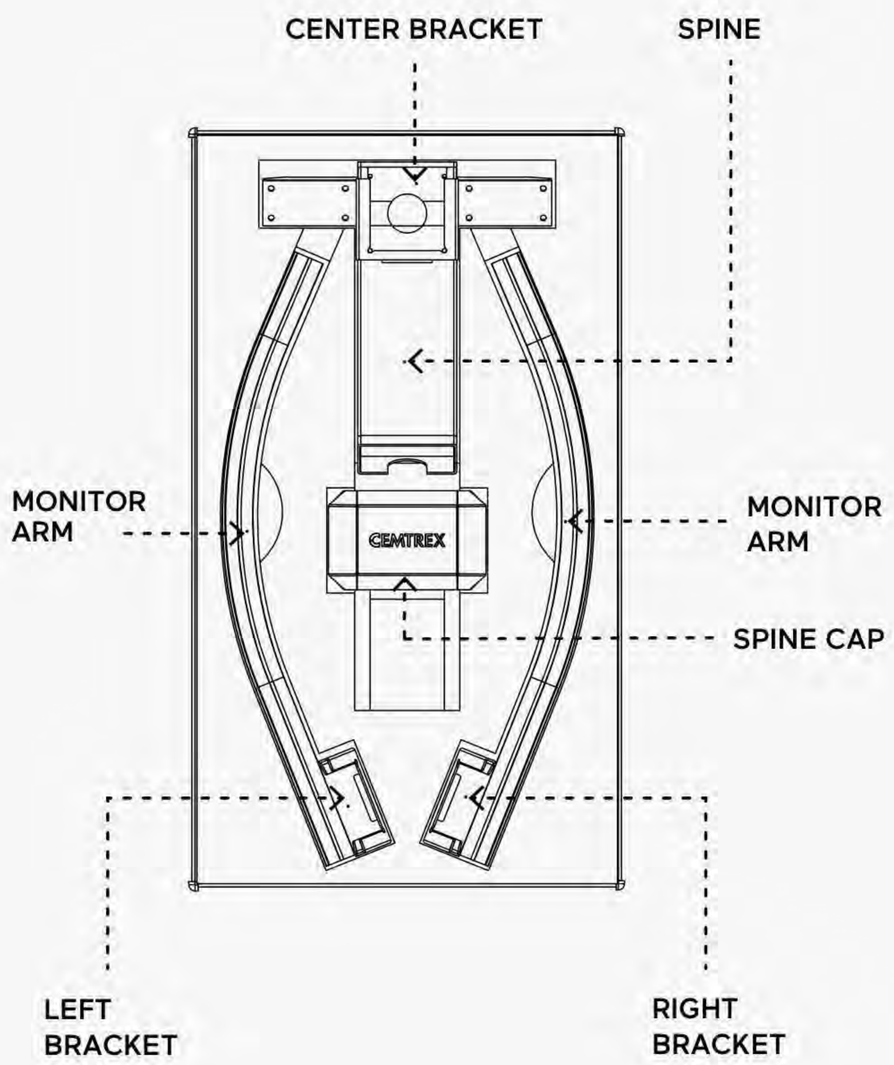

Box 4

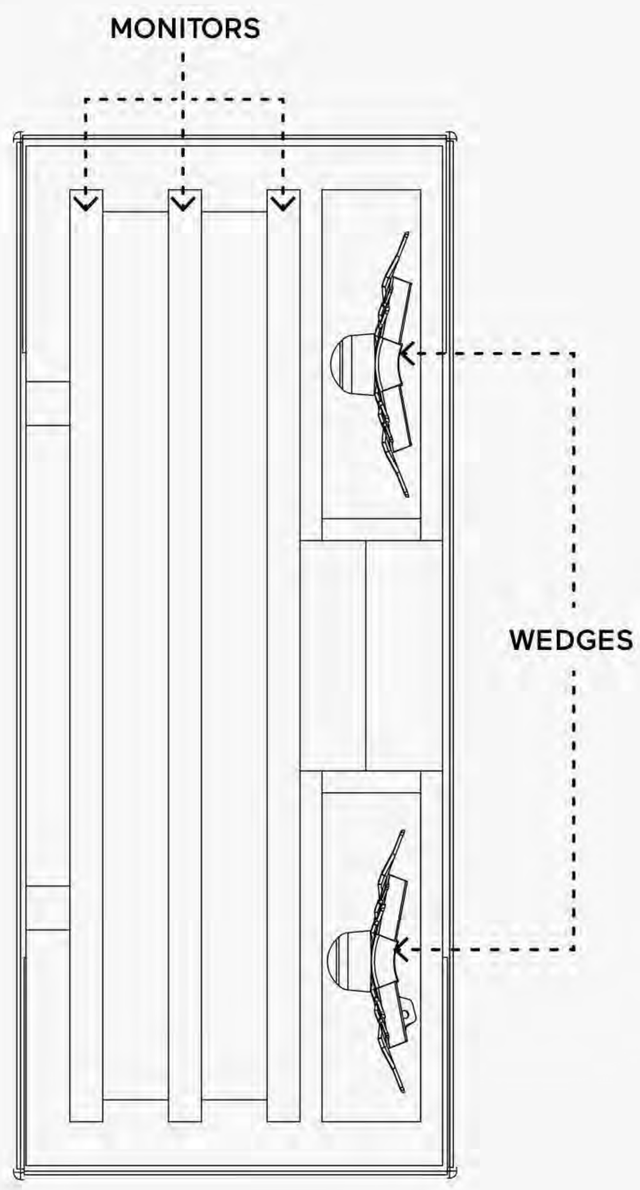

TABLETOP AND LEGS ASSEMBLY

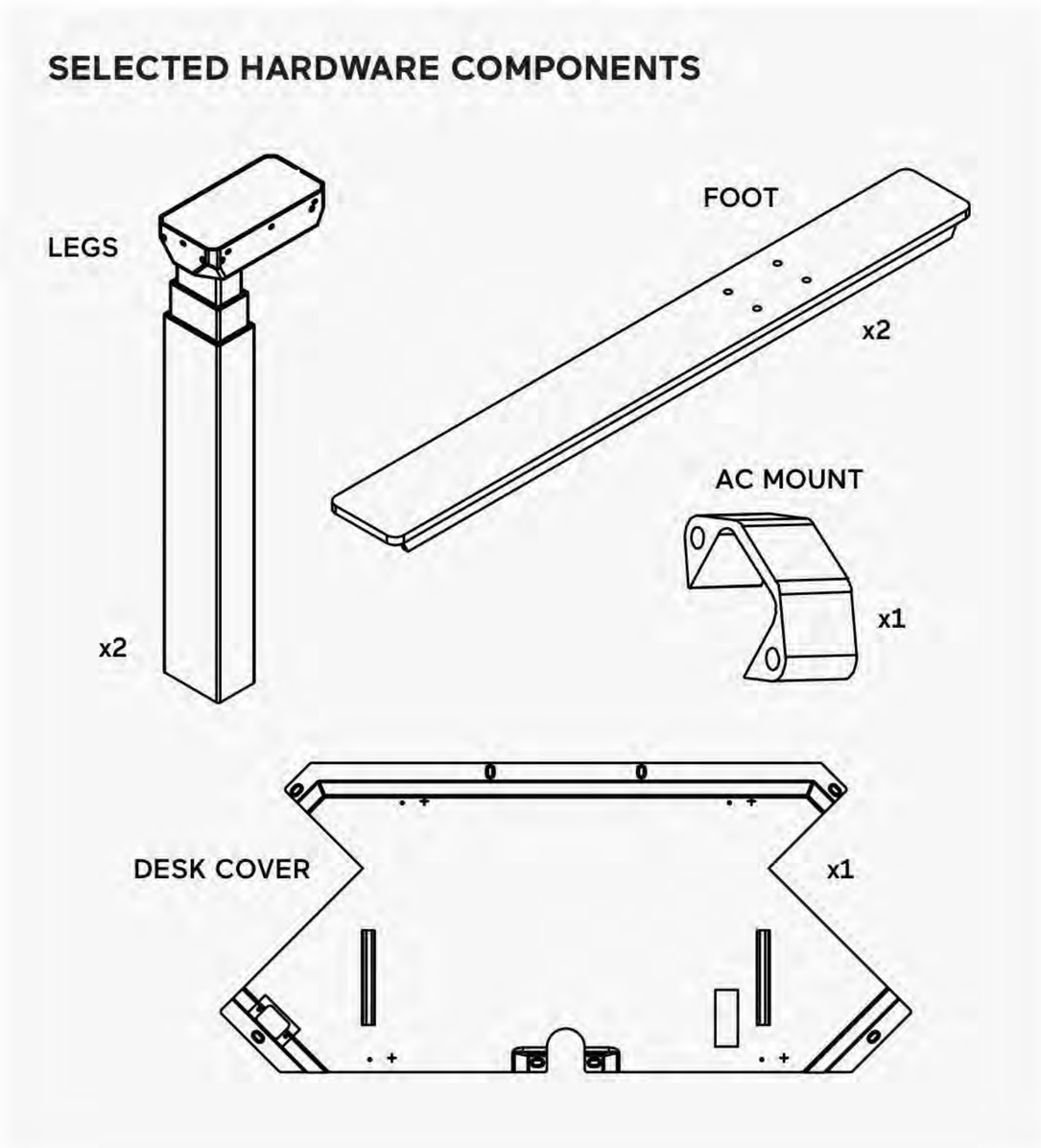

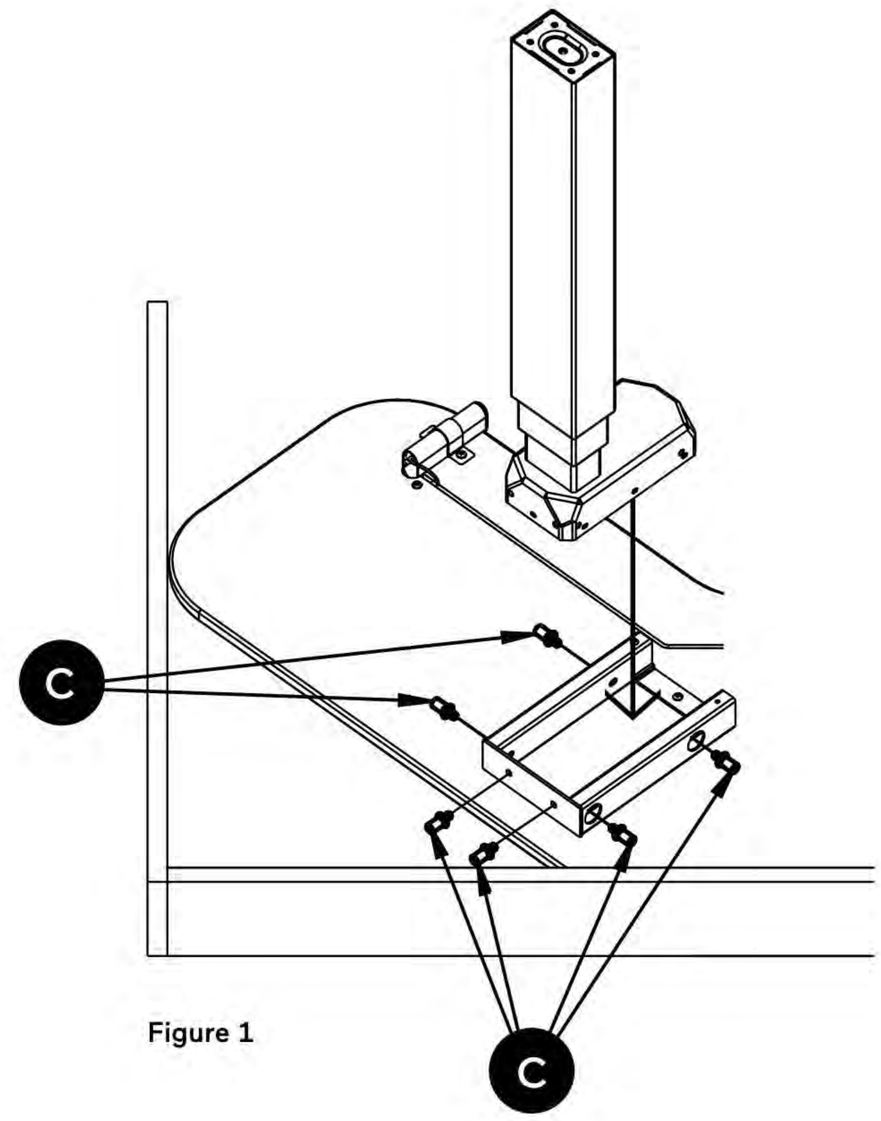

Figure 1

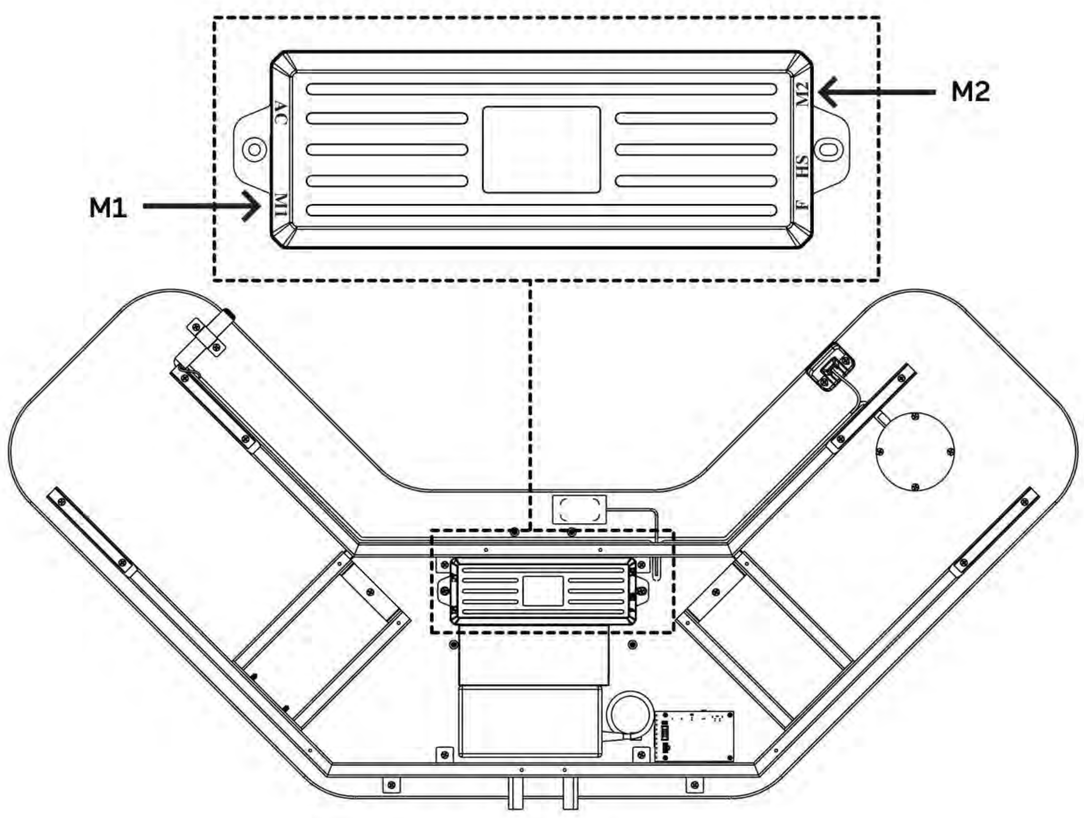

Figure 2

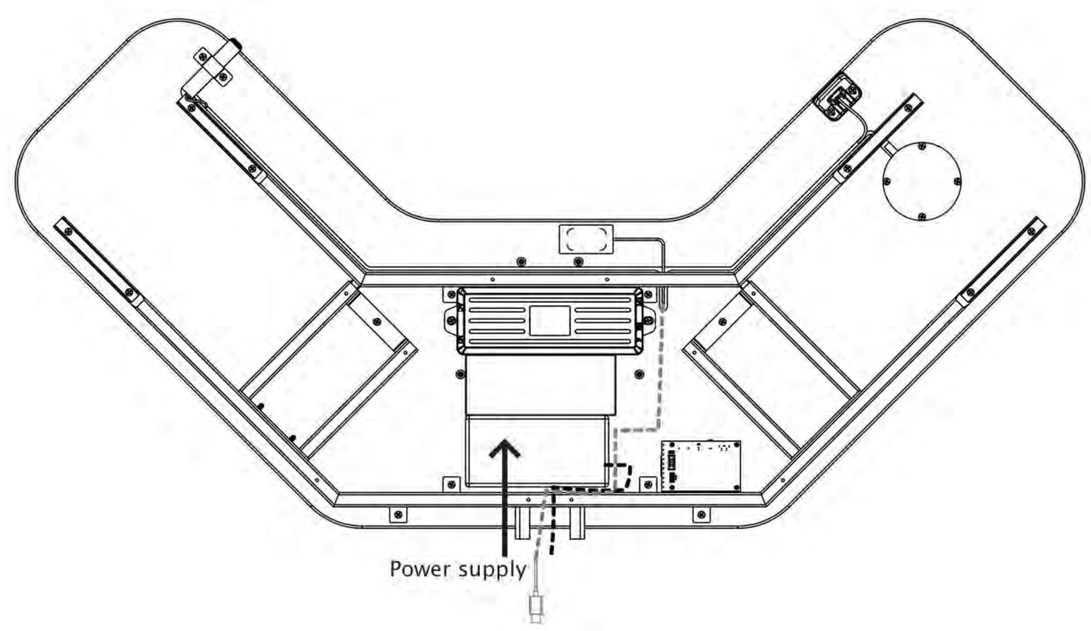

Figure 3

STEP 1

NOTE: DO NOT REMOVE DESK FROM PACKAGING UNTIL INSTRUCTED

1. Place leg in cradle
2. Use six screws **(C)** to fasten each leg to frame **(Figure 1)**
3. Each leg has a dangling cord. Once screwed in tightly, connect the cord to the matching port labeled **M1** or **M2** **(Figure 2)**
4. Repeat for second leg
5. Route the WHITE USB cable and the black power cable from the identified power supply along the dotted paths as shown **(Figure 3)**

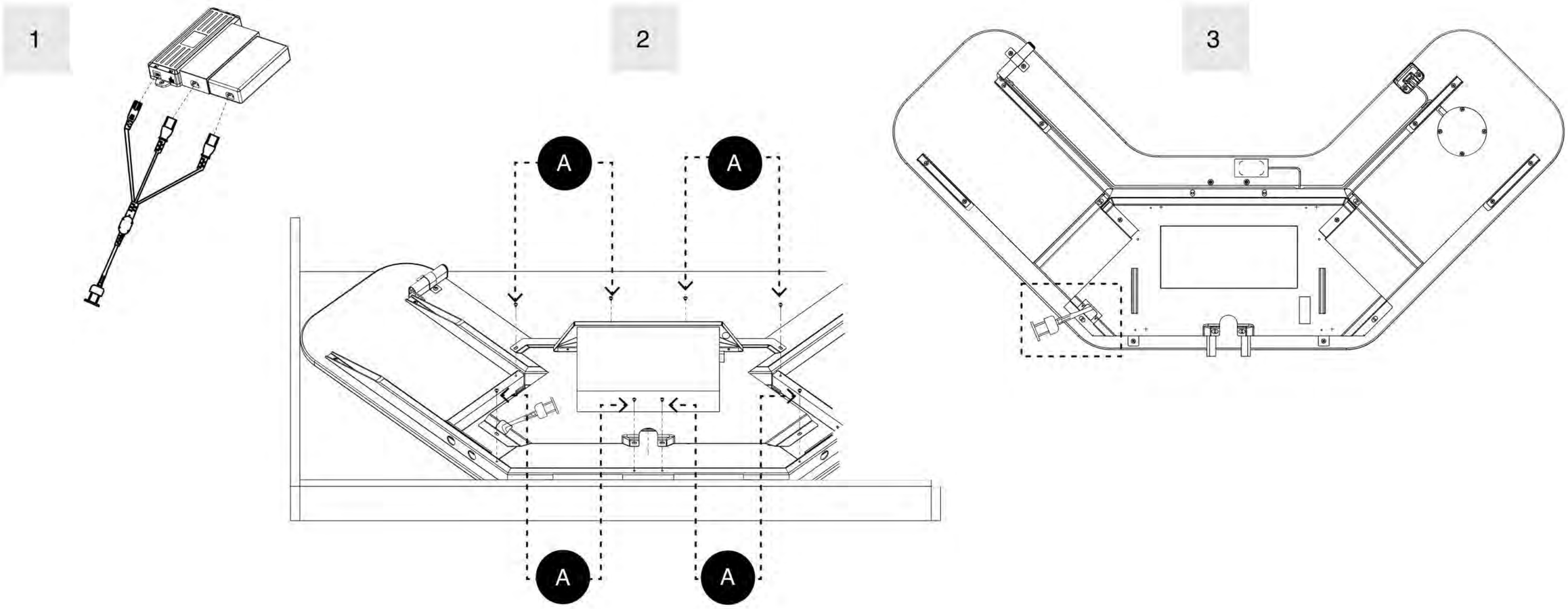

STEP 2

1. Using the three-headed cable included inside the desk, make connections to the three power supplies
2. Place desk cover on framework
3. Fasten the cover to the desktop using eight screws **(A)**

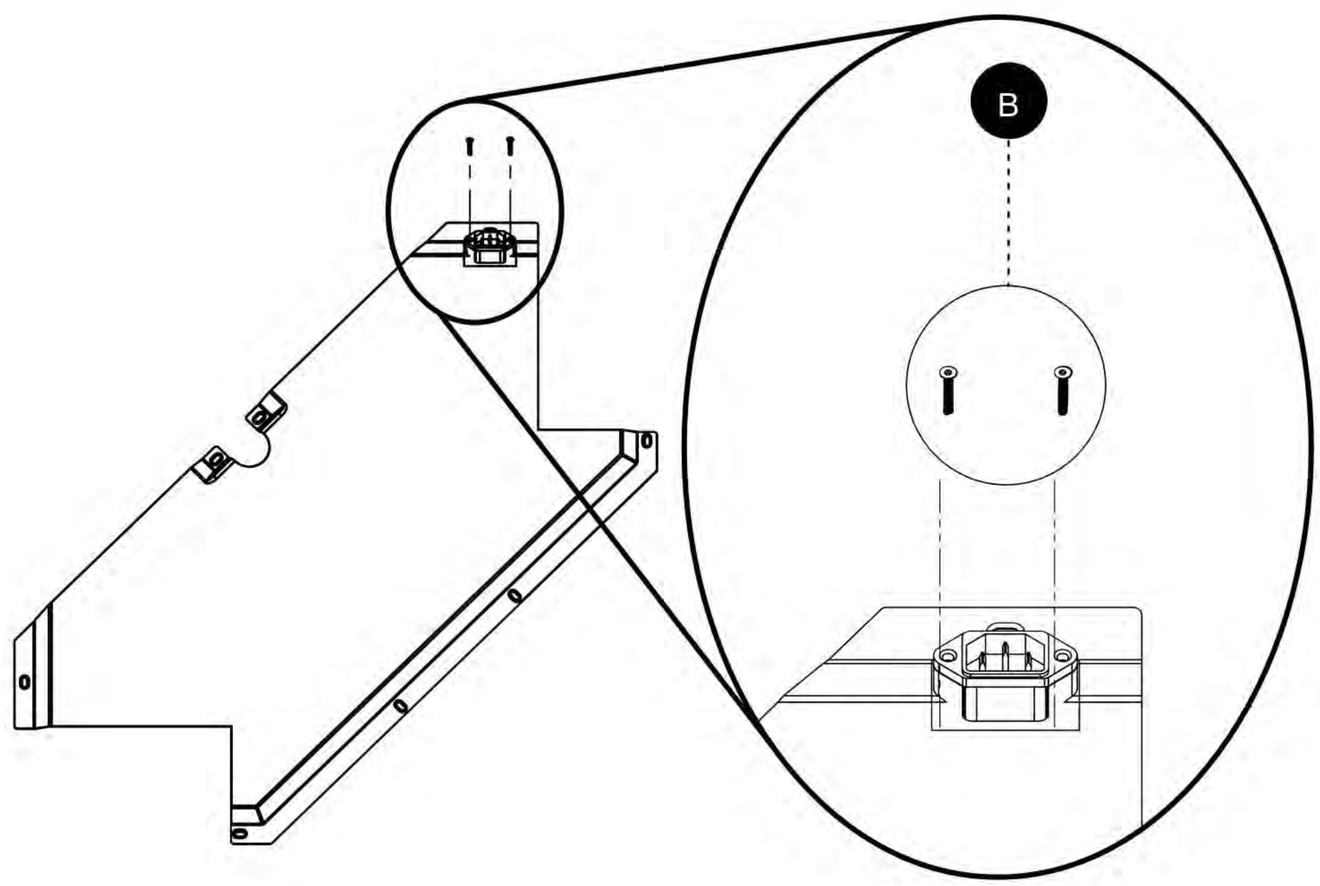

STEP 3

1. Fasten the AC mount to the receptacle using two screws **(B)**

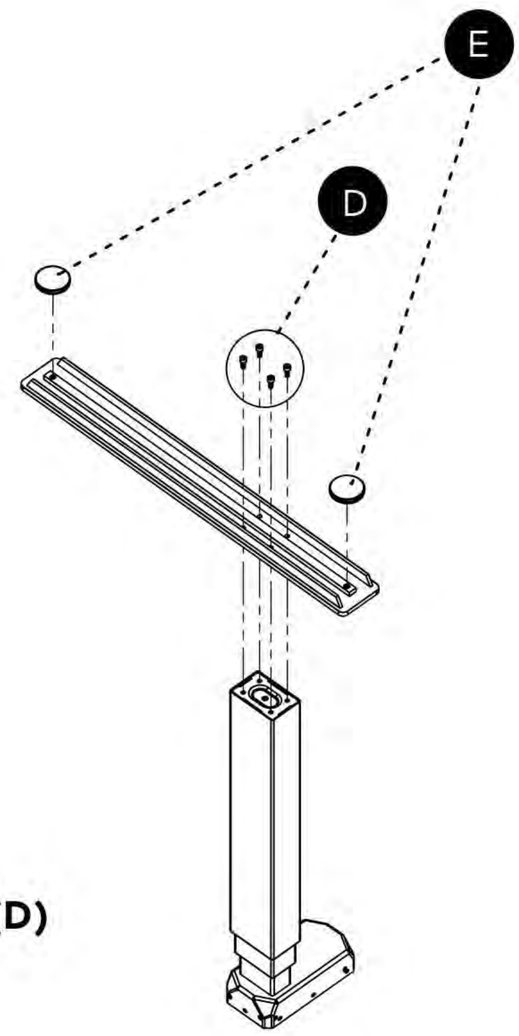

STEP 4

1. Fasten the foot to a leg using four screws **(D)**
2. Screw in the two leveling mounts **(E)**
3. Repeat for the second leg

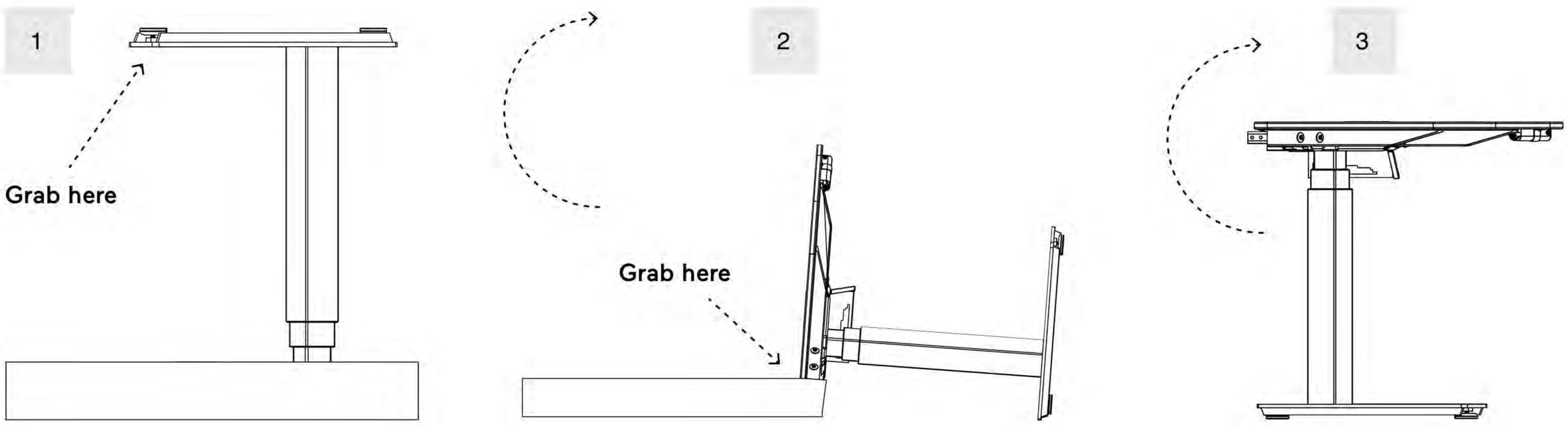

STEP 5

1. While still in packaging, flip the desk as shown
2. Once the desk is flipped, remove the packaging

PLEASE NOTE:
AS THE DESK IS BEING ROTATED, THE PACKAGING MAY COME OFF. THIS IS ACCEPTABLE.

MOUNTING ASSEMBLY

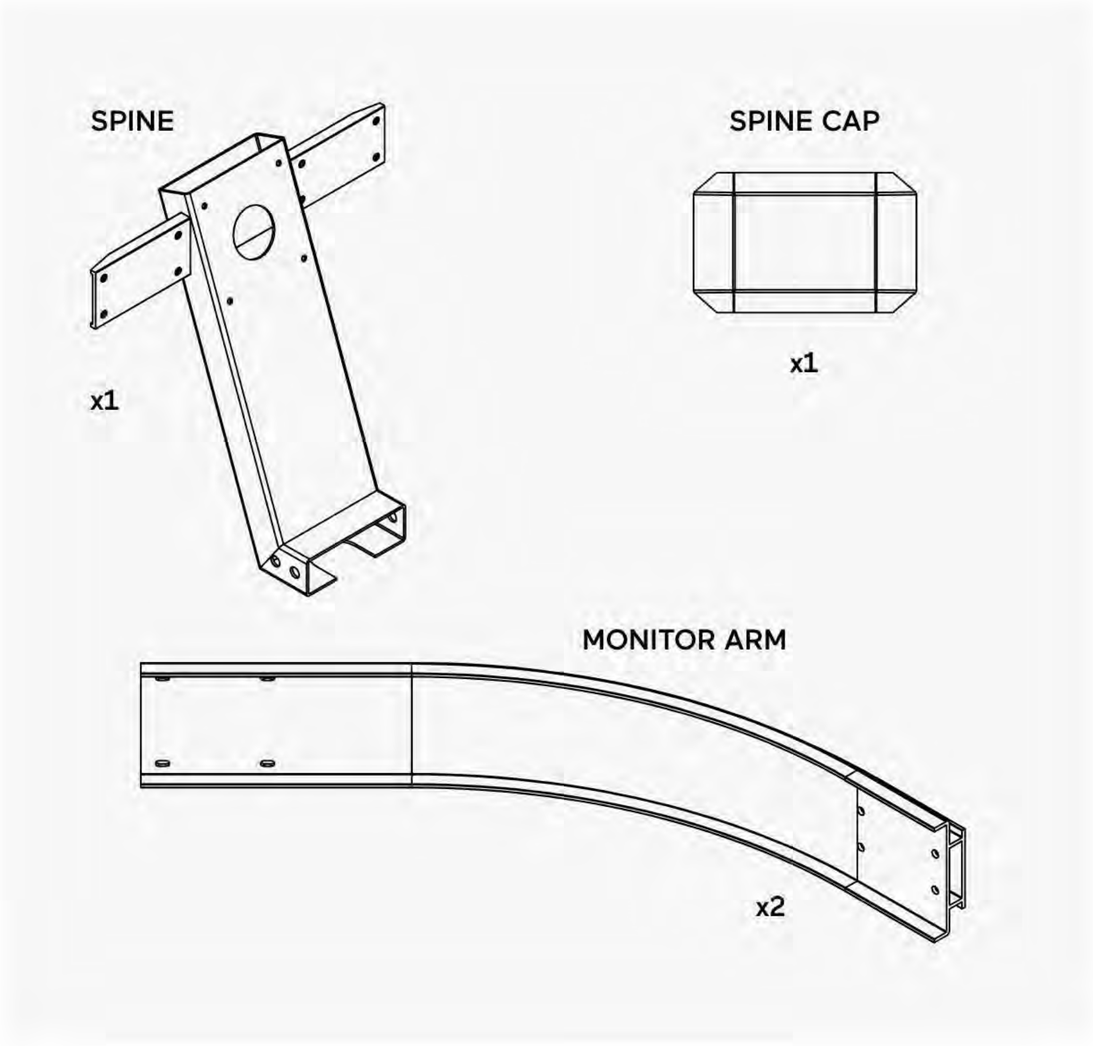

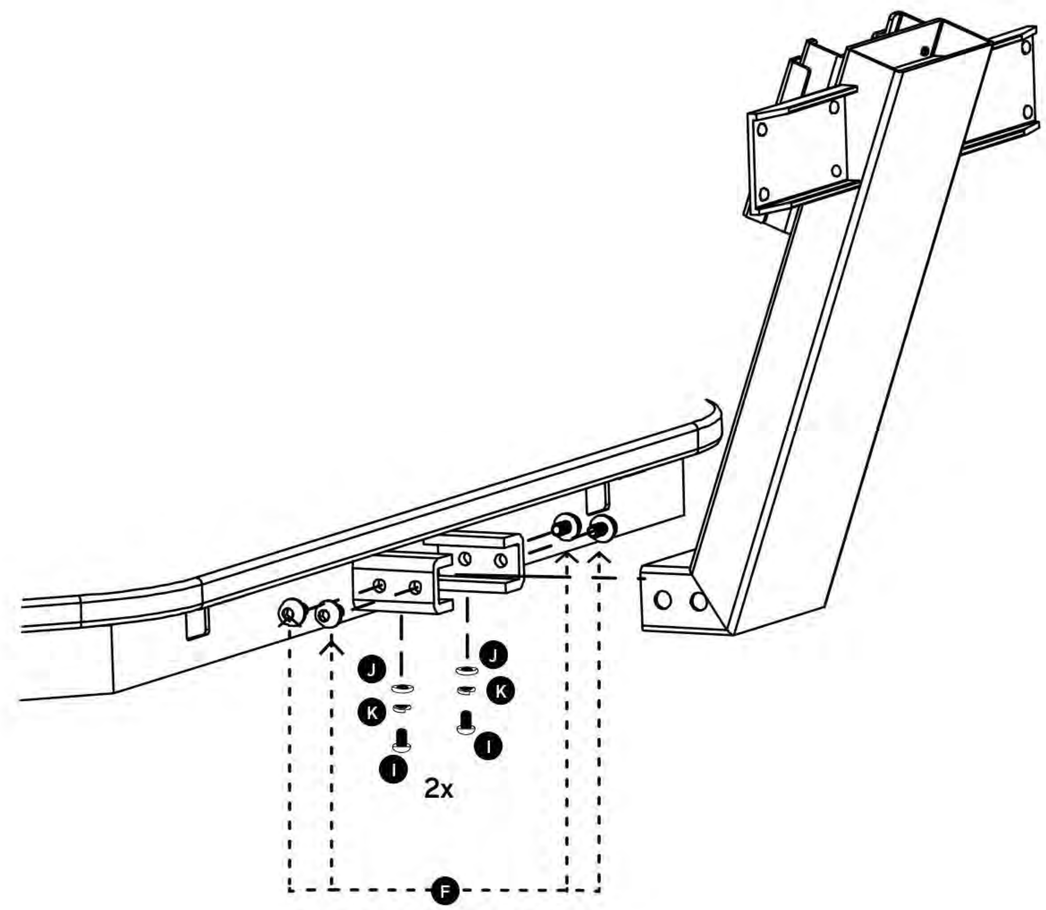

STEP 6

NOTE: The spine will be zip-tied to the monitor arms in packaging. **DO NOT CUT ZIP TIES UNTIL INSTRUCTED**

1. Slide the spine onto the spine mount
2. Fasten the spine to the tabletop using six screws (F & I), two washers (J) and two lock washers (K)

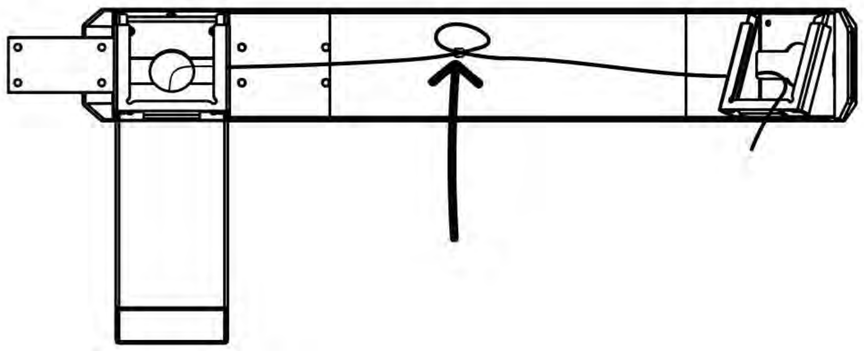

Figure 1

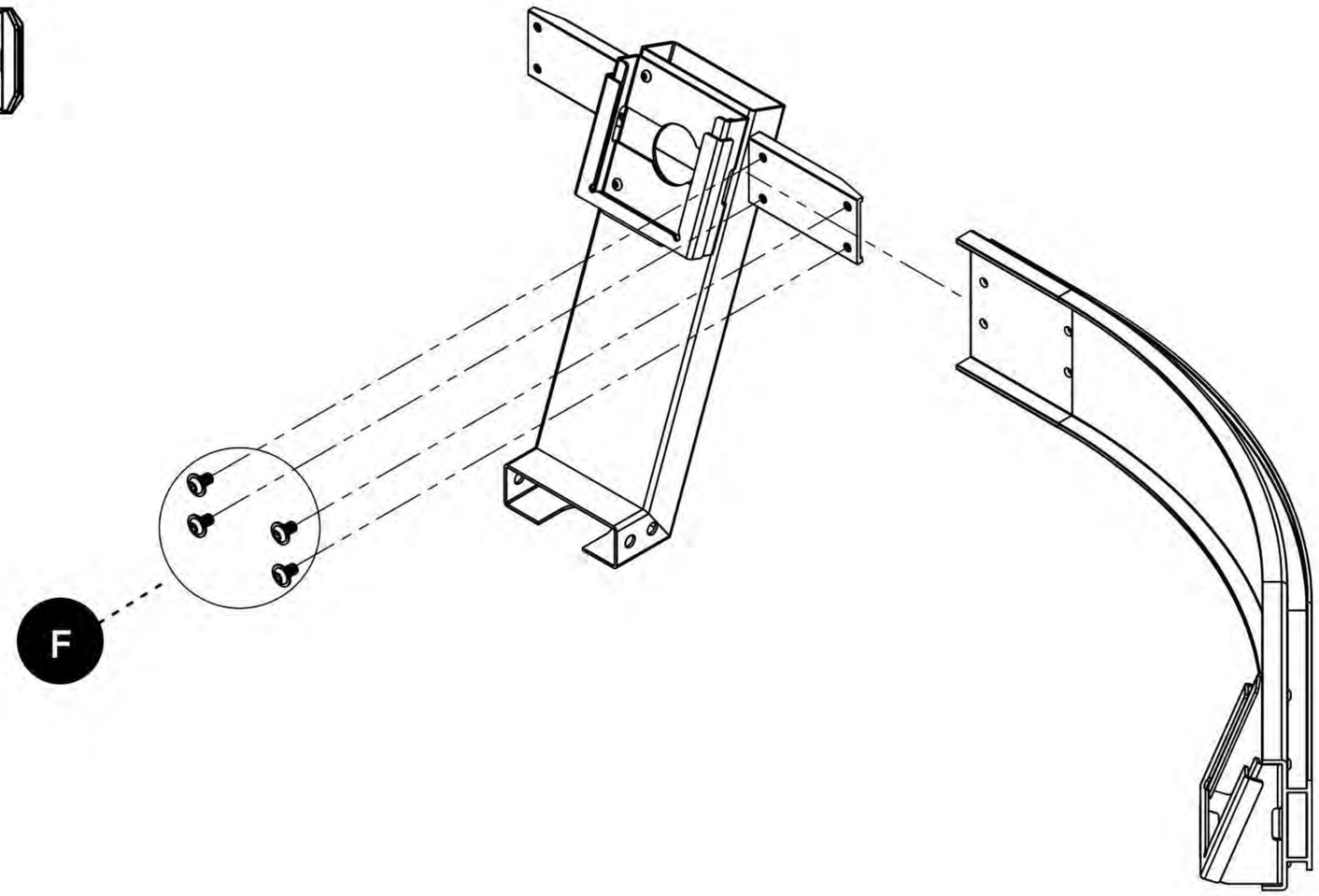

STEP 7

NOTE: WHILE POSITIONING ARMS, MAKE SURE NOT TO OVEREXTEND THE VIDEO CABLES
OPTIONAL: MINIMIZE CABLE SLACK WITH THE INCLUDED VELCRO STRAPS (FIGURE 1)

1. While supporting the weight of the first monitor arm, cut the zip-tie connecting it to the spine
2. Slide the arm onto the spine
3. Attach the monitor arm to the spine using four screws **(F)**
4. Repeat for the second arm

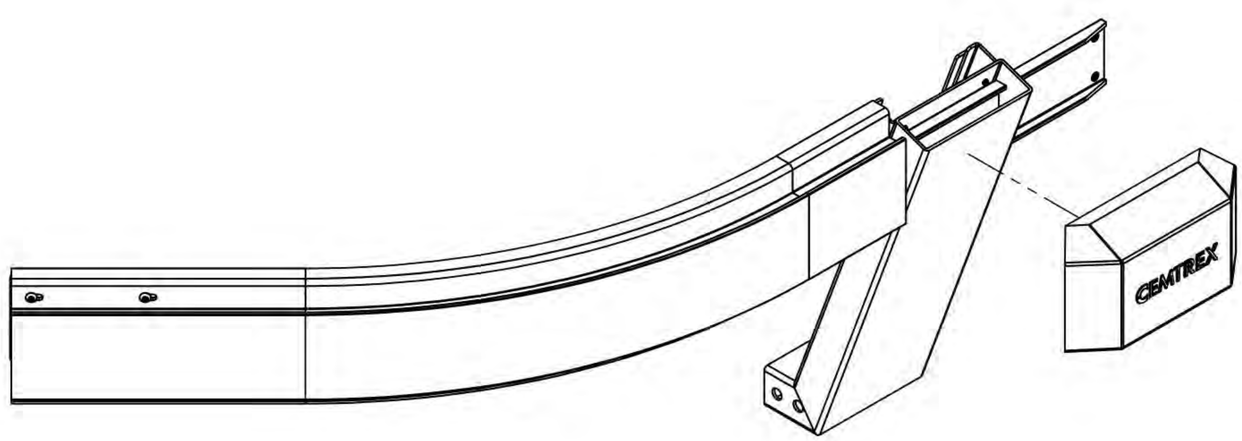

STEP 8

Push the spine cap onto the top of the spine until you feel it click into place

MONITOR AND WEDGE ASSEMBLY

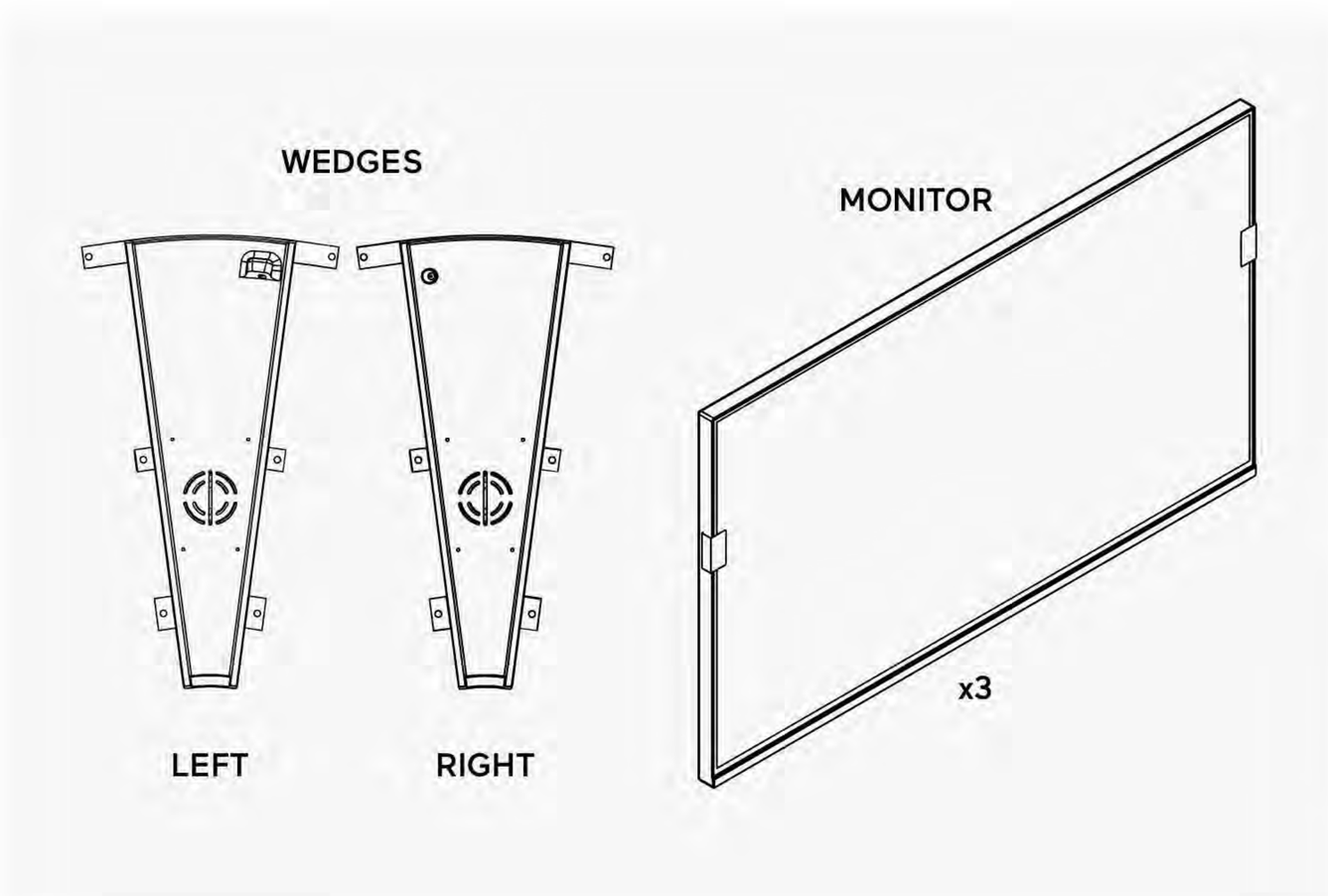

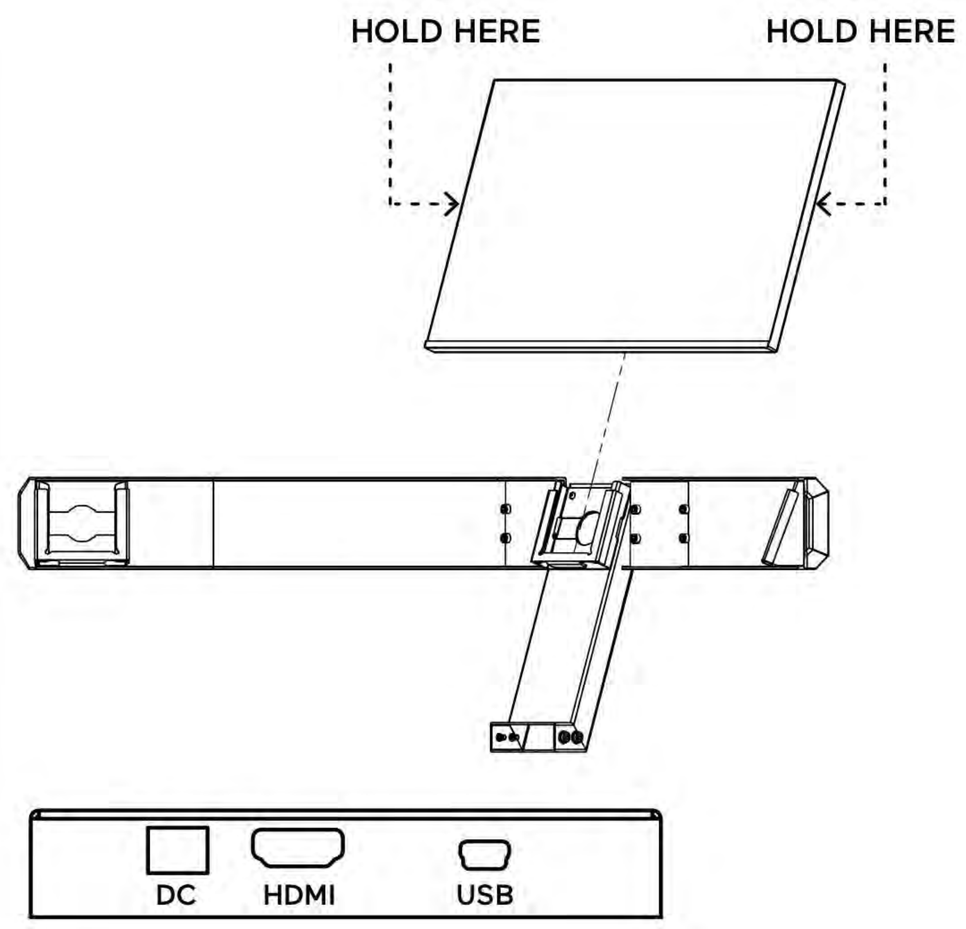

STEP 9

1. Slide the center monitor into the center bracket
2. Make all three connections (DC, HDMI, USB) under the monitor

NOTE: MONITORS ARE FRAGILE. WHEN REMOVING FROM THE BOX, LIFT BY THE SILVER WRAP TO AVOID DAMAGE. IF LIFTING OR MOVING THE MONITOR IS NECESSARY, GRASP THE MONITOR WITH ONE HAND ON EACH SIDE, NEVER PUTTING PRESSURE ON DISPLAY

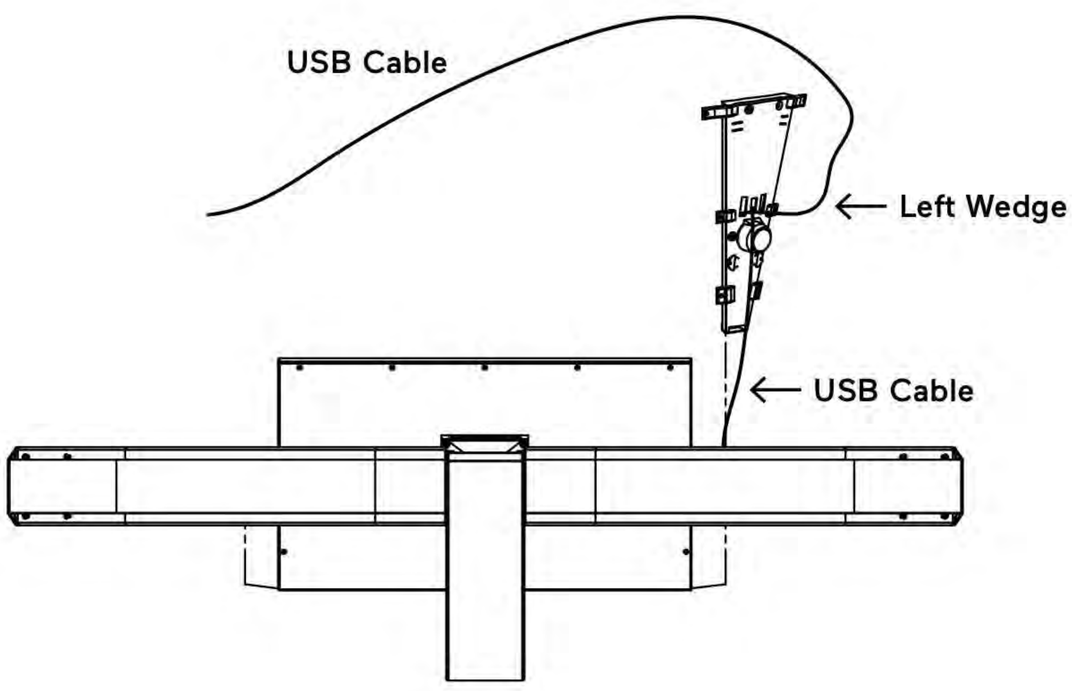

Figure 1

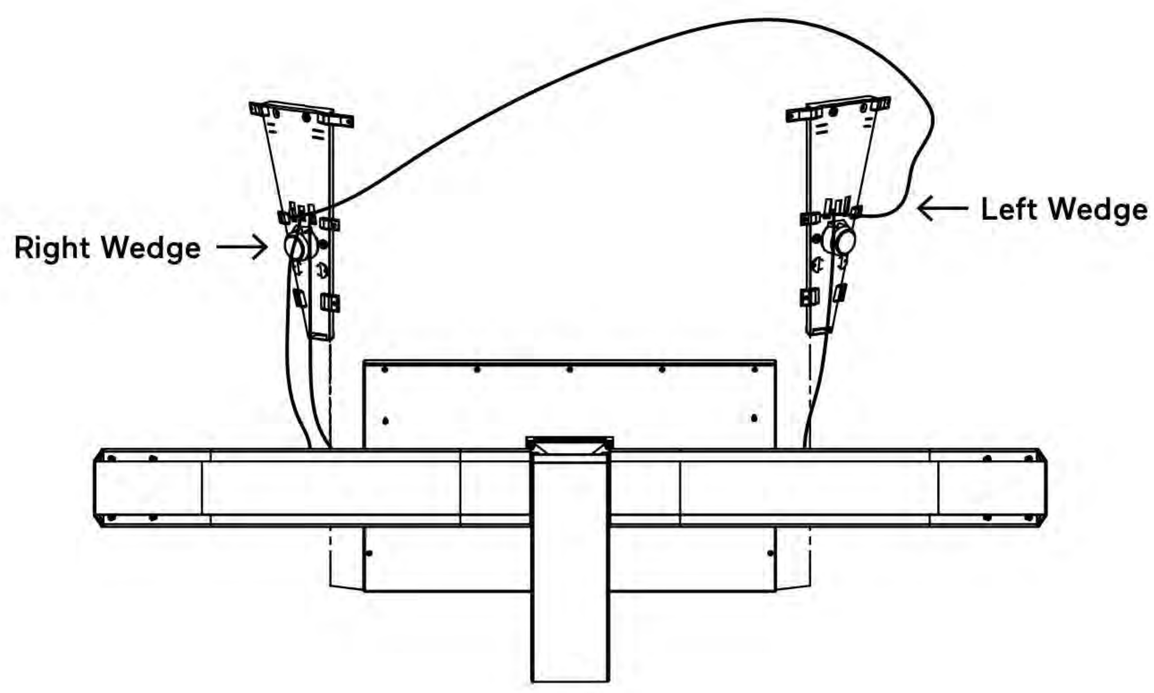

Figure 2

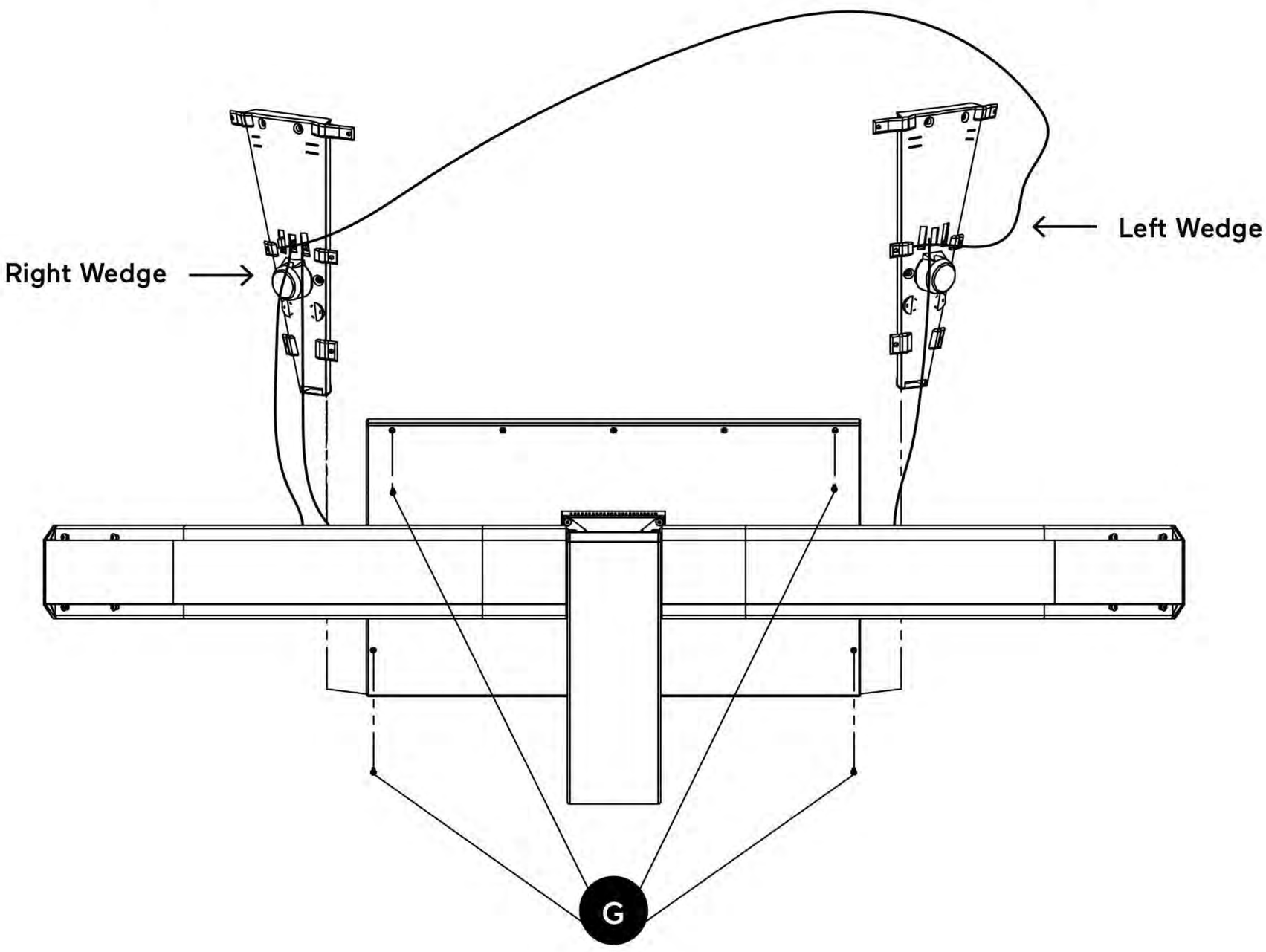

STEP 10

NOTE: SOME CABLES TO CONNECT THE WEDGES MAY BE TAPED TO THE MONITOR ARMS, THEY DO NOT NEED TO BE UNTAPED

1. Align the wedges to the left and right of the center monitor
2. Take the USB cable from the left monitor arm and connect it to the left wedge **(Figure 1)**
3. Drape the long cable protruding from the left wedge across the spine **(Figure 1)**
4. Plug the long cable into the right wedge **(Figure 2)**
5. Take the two connectors from the right monitor arm and connect them to the right wedge **(Figure 2)**
6. Fasten the wedges to their adjacent monitors with four screws **(G)**

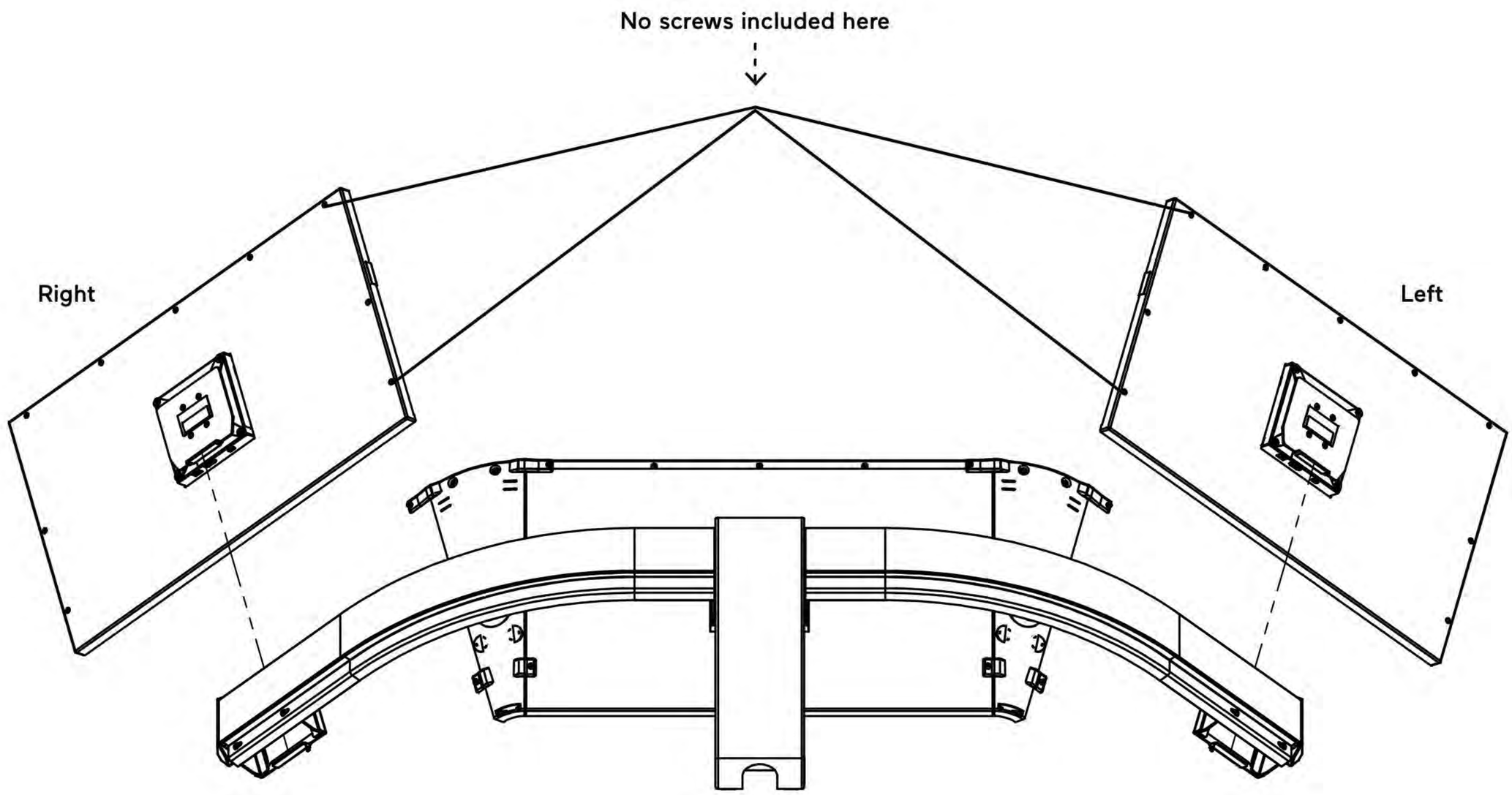

STEP 11

1. Slide the outer monitors into their corresponding brackets (labeled left and right)
2. Make all three connections under each monitor **(DC, HDMI, USB)**

NOTE: EACH OUTER MONITOR WILL BE MISSING THE OUTSIDE SCREWS ON ONE SIDE, THIS SIDE SHOULD FACE THE ADJACENT WEDGE

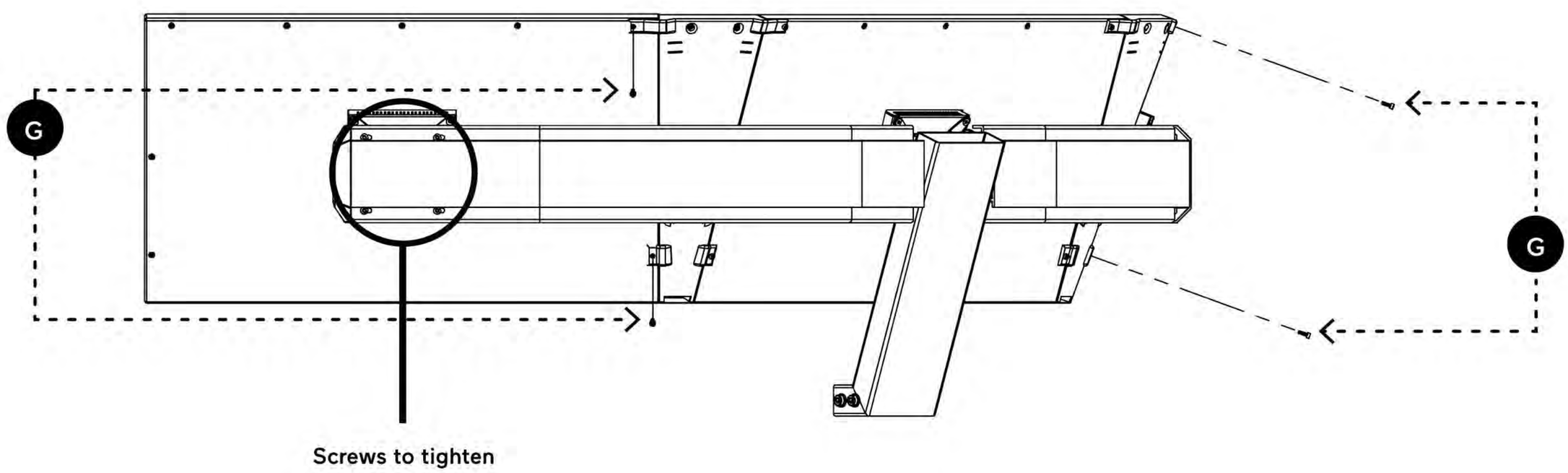

STEP 12

1. Fasten the monitors to their adjacent wedges using two screws each **(G)**
2. Tighten screws in the brackets behind each monitor

ELECTRICAL CONNECTION S

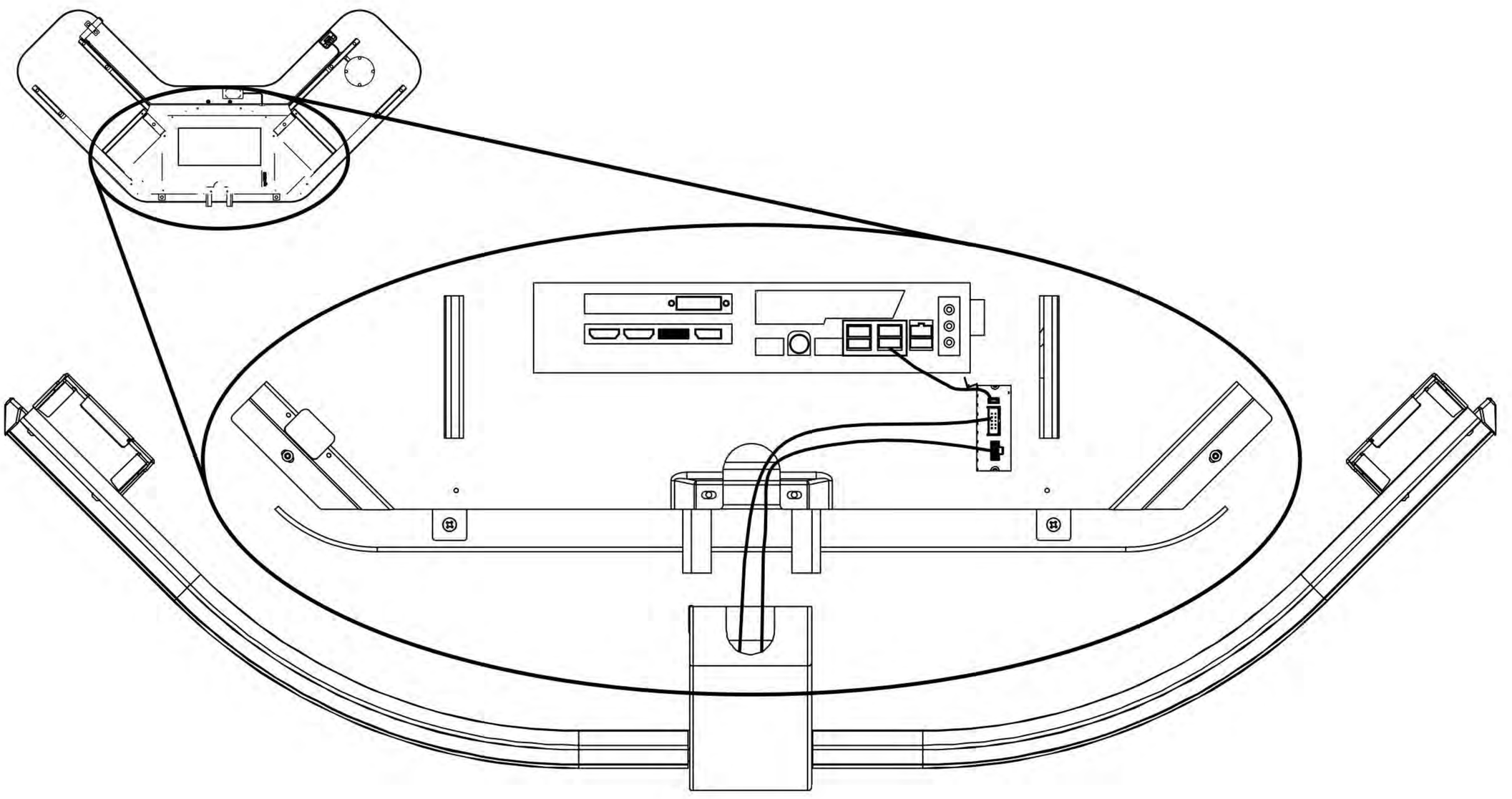

Figure 1

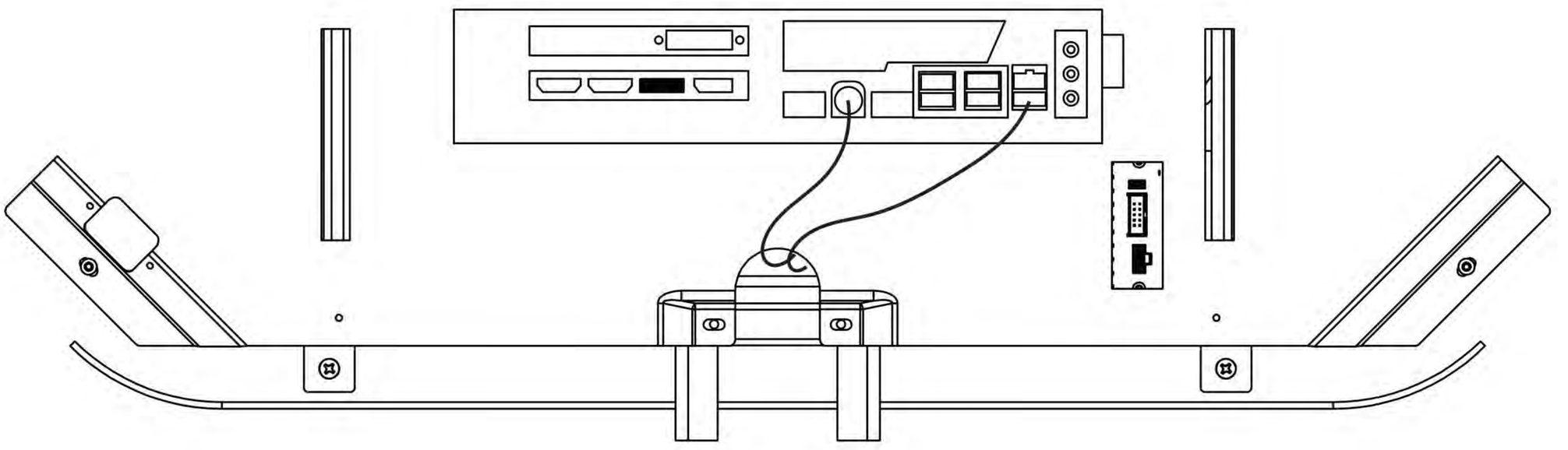

Figure 2

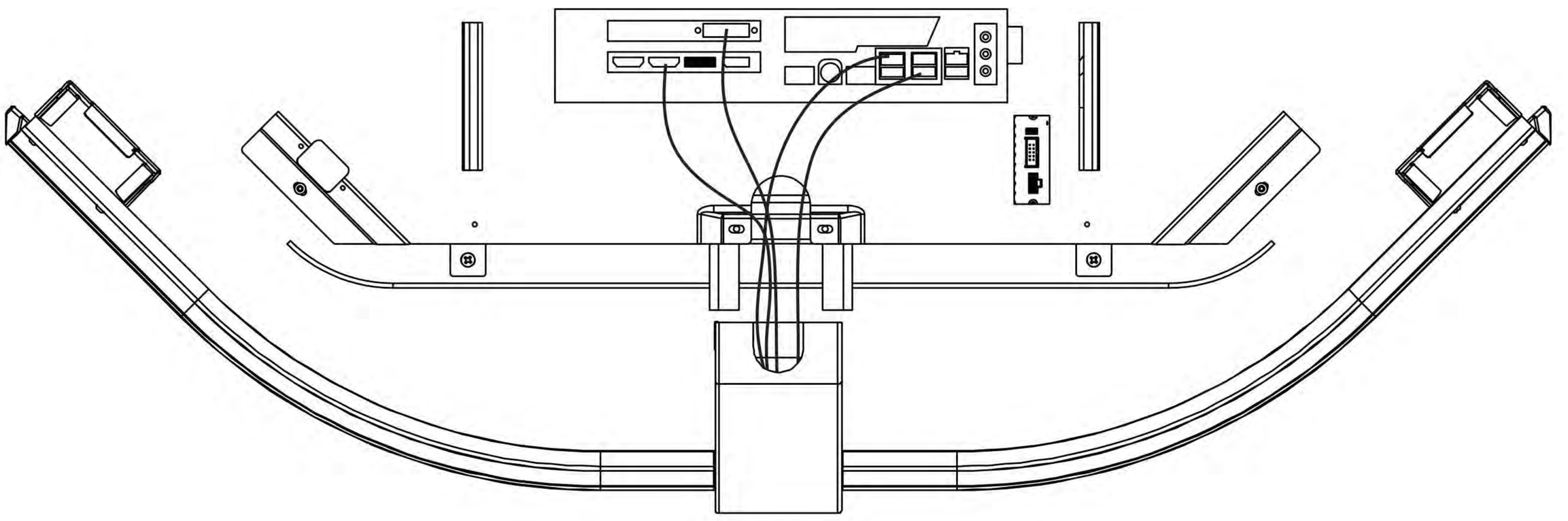

Figure 3

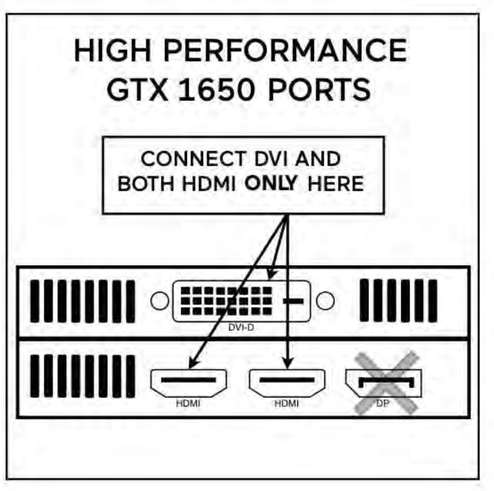

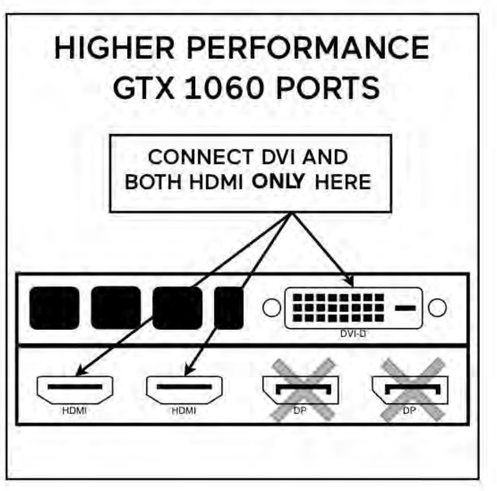

STEP 13

1. Make two connections from the spine to the ports under the desk **(Figure 1)**
2. Make one connection from under the desk to the PC **(Figure 1)**
3. Connect the two cables protruding from underneath the desk cover to the PC **(Figure 2)**. As shown, the white USB cable coming from inside the desk must be connected to the corresponding (red) port to ensure adequate STARK performance
4. Make the remaining connections from the spine to the PC **(Figure 3)**

PLEASE NOTE:

- GTX 1060 CONGURATION SHOWN. FOR GTX 1650 SEE INSTRUCTION GRAPHIC.

PC Cover Installation and Power Up

PC COVER

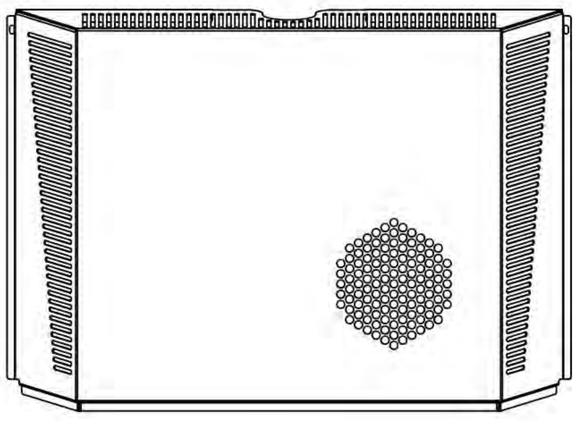

x1

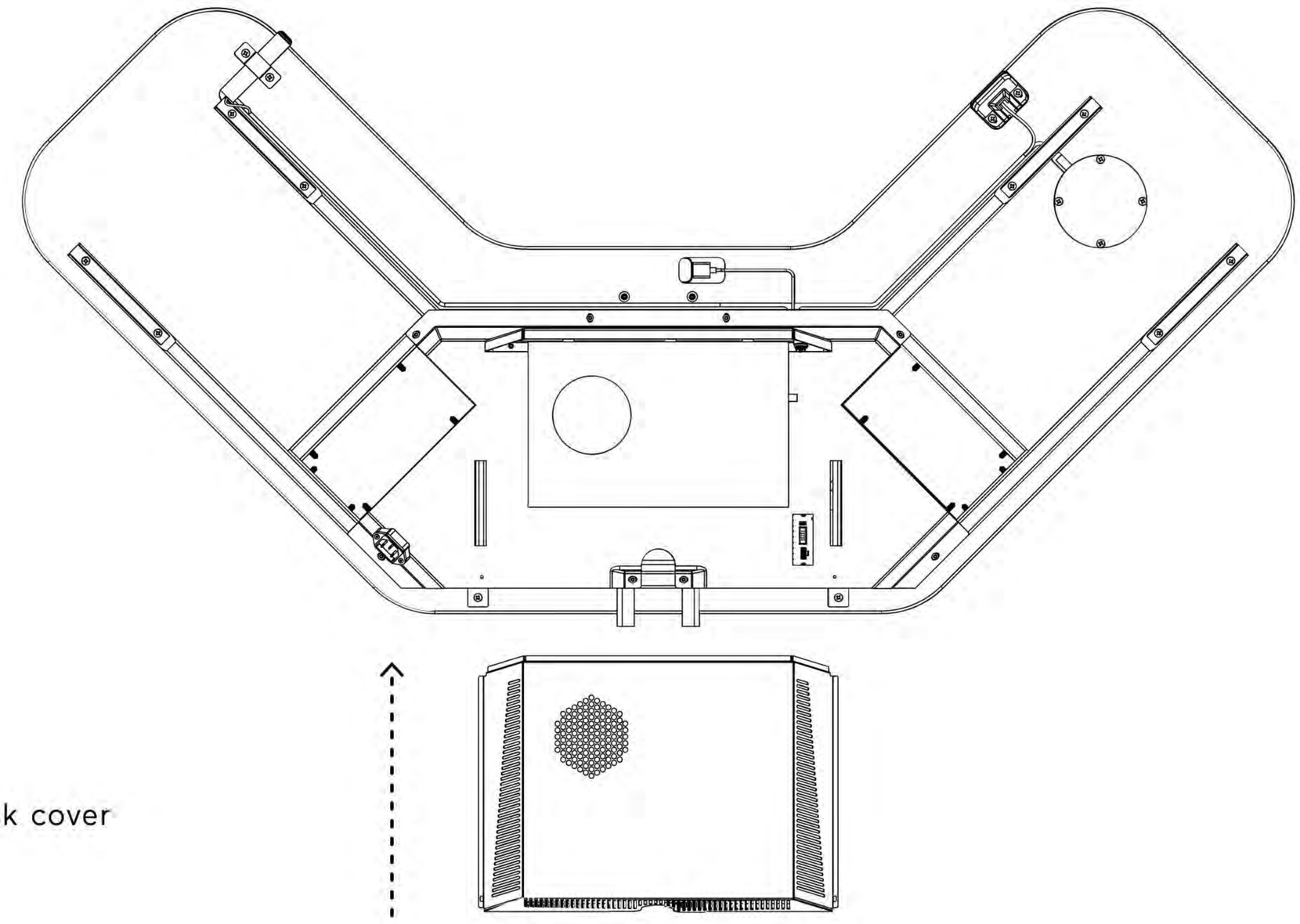

STEP 14

1. Slide the PC cover onto the desk cover

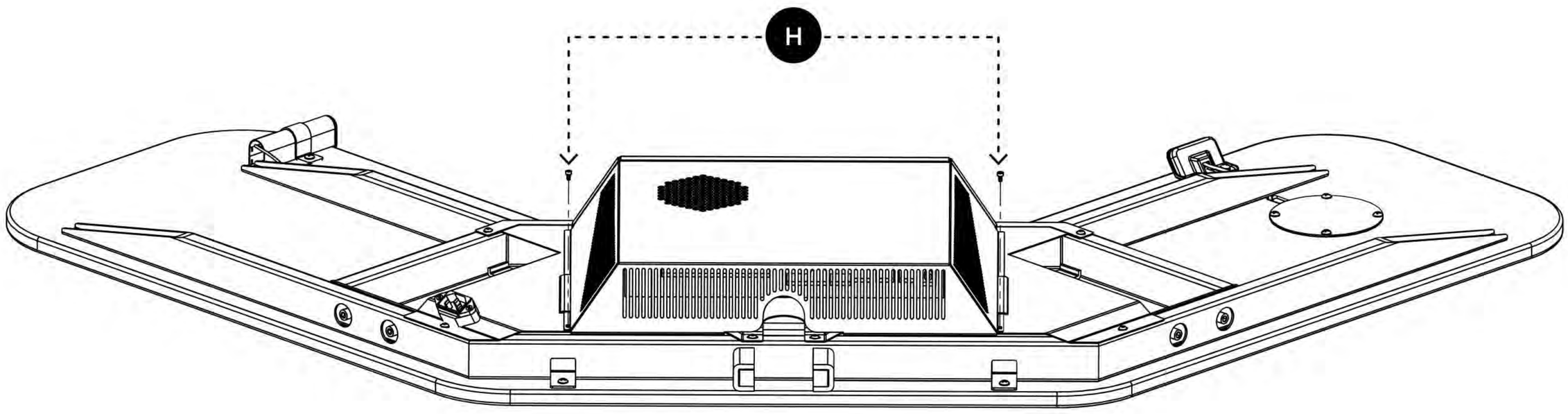

STEP 15

1. Fasten the PC Cover using two screws **(H)**

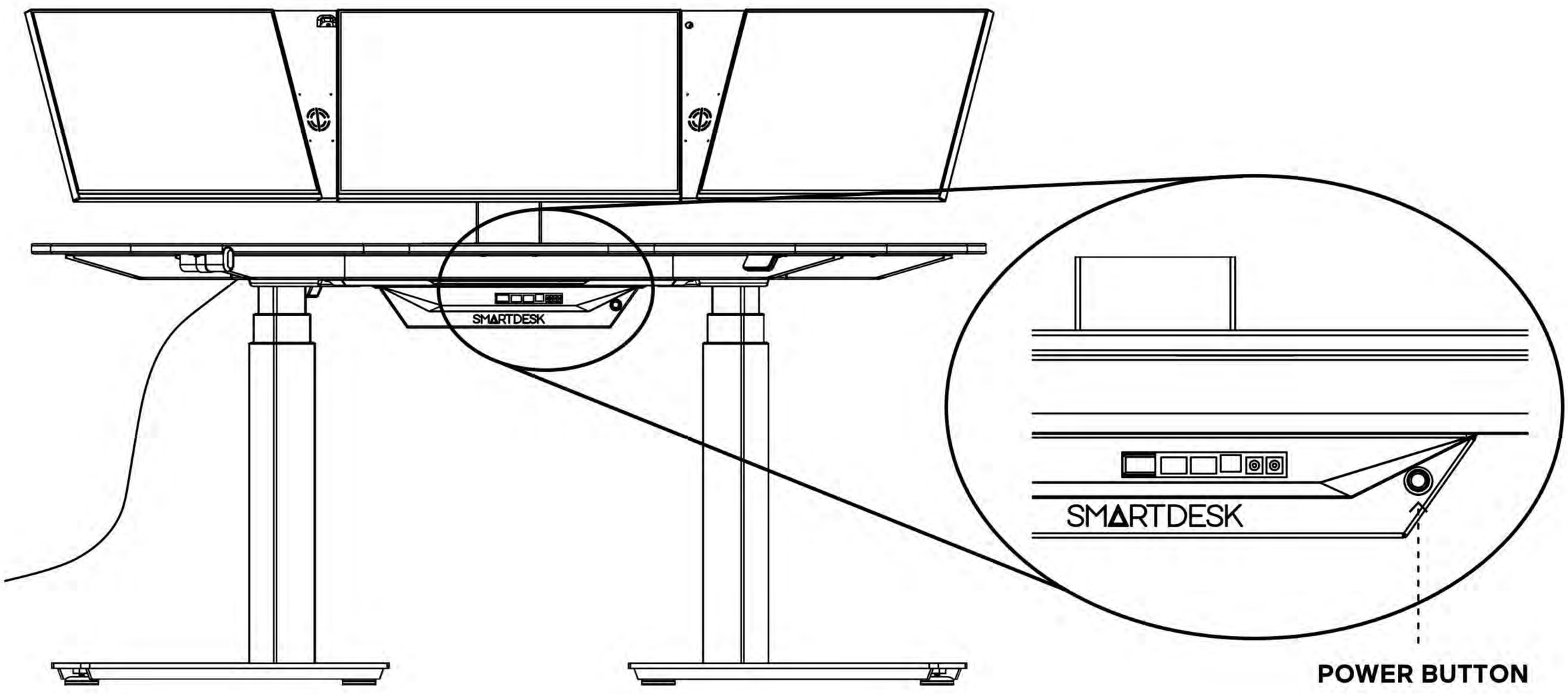

STEP 16

1. Use the power cord from Box 1 to connect the desk to power
2. Power up and get ready to experience the new way we work.

Federal Communications Commission (FCC) Declaration of Conformity

Declares, that the products
Product Name: **CEMTREX SMARTDESK**
Model Number: SDK-GLBS1-001/SDK-GLPR1-001/SDK-MTBS1-001/SDK-MTPR1-001
Comply with Part 15 of the FCC Rules. Operation is subject to the following two conditions:
(1) This device may not cause harmful interference, and (2) this device must accept any interference received, including interference that may cause undesired operation.
Note: This equipment has been tested and found to comply with the limits for a Class B digital device, pursuant to part 15 of the FCC Rules.
These limits are designed to provide reasonable protection against harmful interference in a residential installation. This equipment generates, uses and can radiate radio frequency energy and, if not installed and used in accordance with the instructions, may cause harmful interference to
radio communications. However, there is no guarantee that interference will not occur in a particular installation. If this equipment does cause harmful interference to radio or television reception, which can be determined by turning the equipment off and on, the user is encouraged to try to correct the interference by one or more of the following measures:
1. Reorient or relocate the receiving antenna.
2. Increase the separation between the equipment and receiver.
3. Connect the equipment into an outlet on a circuit different from that to which the receiver is connected.
4. Consult the dealer or an experienced radio/TV technician for help.

WARNING

Failure to follow the warning in this section may create the risk of an electrical shock. In addition, you could create an electrical short, which may create the risk of a fire.

1. DO NOT place the product near heaters, air conditioners, electrical fans, refrigerators, or water. Doing so may create the risk of an electrical shock, short circuit, or fire, as water may come into contact with the product (including condensation caused by heating/air conditioning/ventilation equipment).
2. DO NOT expose the product to excessive dust or debris. Doing so may create risk of an electrical shock, short circuit, or fire.
3. DO NOT place this product on an unstable cart, stand, or table. This product is heavy and may fall, causing injury to you or others and serious damage to the product.
4. DO NOT place heavy objects on the desk
5. DO NOT attempt to service this product yourself. Opening or removing covers may expose you to dangerous voltage points and other risks and may void your warranty.
6. If water, other liquids, or metal objects get inside the product, immediately unplug, if safe, the product from the AC power outlet and contact CEMTREX SMARTDESK personnel.
7. This product should be connected to an AC power source within the range indicated on the rating label (You can find the rating label under the desk). DO NOT connect it to a DC power source or inverter. If you are not sure what kind of power source you have, contact a qualified electrician.
8. If the product becomes unusually hot, releases smoke, generates any strong smells, or if you accidentally spill any liquid on it, immediately unplug, if safe, the product from the AC power outlet.
9. This product is equipped with a grounded plug. This plug will only fit into a grounded power outlet. This is a safety feature. If you are unable to insert the plug into the outlet, call your electrician to replace your obsolete outlet. DO NOT attempt to defeat the purpose of the grounded plug.
10. DO NOT leave the equipment in an unconditioned environment with a storage temperature above 60°C (140°F) or below 0°C (32°F).
11. Always keep strong magnetic or electrical objects away from the equipment.
12. This product is not for children
13. Ensure the length of power cord is appropriate length for desk travel. Anything with a cord that is not long enough for the desk's range of motion could be pulled down and cause other items to fall, and cause damage to property.
14. Desk contains pinch points. Keep hands, fingers, and legs clear of any moving parts.
15. DO NOT store large objects underneath the desk.
16. DO NOT cover or obstruct any of the convective ventilation holes and slots underneath the desk. Doing so may cause overheating.