ORTAL®

Installation and Operation Manual
Wilderness H Corner Series

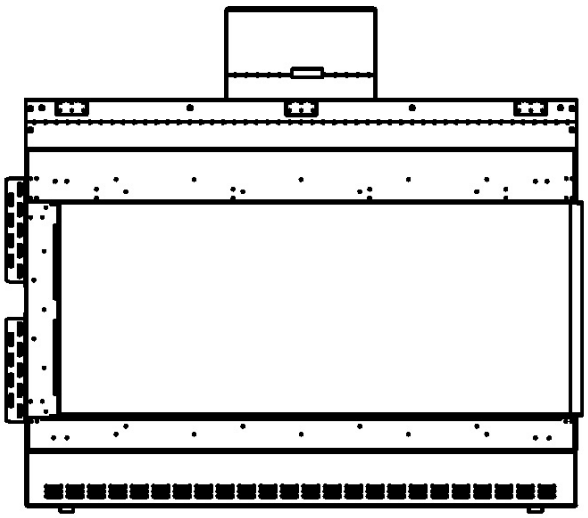

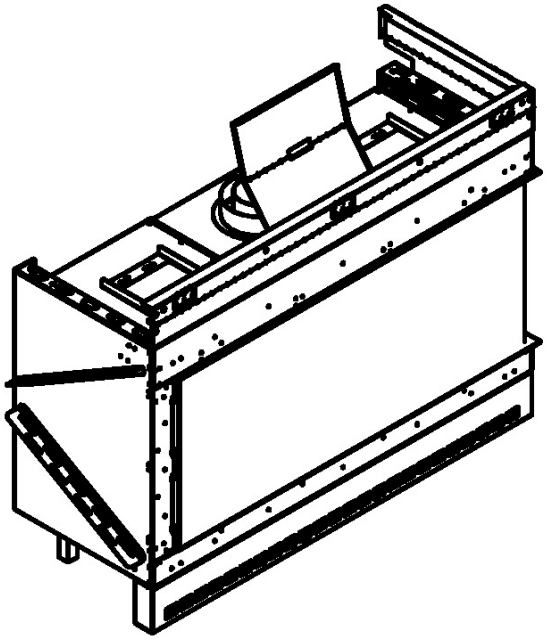

⚠WARNING:
FIRE OR EXPLOSION HAZARD
Failure to follow safety warnings exactly could result in serious injury, death, or property damage

- **DO NOT** store or use gasoline or other flammable vapors and liquids in the vicinity of this or any other appliance.
- **What to do if you smell gas**
  - **DO NOT** try to light any appliance
  - **DO NOT** touch any electrical switch. **DO NOT** use any phone in you building
  - Leave ther building immediately
  - Immediatly call your gas supplier from a neighbor's phone. Follow the gas suppliers's instructions
  - If you cannot reach your gas supplier, call the fire department.
- Installation and service must be performed by a qualified installer, service agency, or the gas supplier.

⚠DANGER

HOT GLASS WILL CAUSE BURNS.

DO NOT TOUCH GLASS UNTIL COOLED

NEVER ALLOW CHILDREN TO TOUCH GLASS.

A barrier designed to reduce the risk of burns from the hot viewing glass is provided with this appliance and must be installed for the protection of children and other at-risk individuals

Wilderness H Corner Series Fireplaces:

Wilderness 25H RS/LS
Wilderness 51H RS/LS
Wilderness 60H RS/LS

General

Safety Information and Warnings

IMPORTANT NOTE: LOCAL CODE
Local codes and regulations that are more stringent than the requirements in this manual take precedence over Ortal requirements.

WARNING: REVIEW ALL WARNINGS
Be sure to review all safety warnings and installation guidelines contained in this manual. Consider installation location, vent configuration, clearances, structural requirements, framing and finish materials, and local codes. ALL warnings and instructions apply to all products manufactured and distributed by Ortal.

WARNING: DO NOT OPERATE FIREPLACE IF:
The glass is NOT properly secured in place; Connection points are not sealed (for fireplaces with glass-to-glass connections);
Glass is cracked; You smell gas; Any part of the fireplace has been under water; You have any doubt about safe operation of the fireplace; Or if any part has been under water, do not use the fireplace. Immediately call a qualified, professional service technician to inspect the fireplace and to replace any parts of the control system and any gas controls which have been under water.

WARNING: ELECTRICAL GROUNDING
All electrical connections must be properly installed, insulated, and secured to avoid potential **ELECTRICAL SHOCK** and **FIRE HAZARD** and malfunction of the system. Consult local building code requirements. In the absence of local codes, refer to the National Electric Code, ANSI/NFPA 70, or the Canadian Electric Code, CSA C22.1.

WARNING: MATERIAL USAGE
All materials and objects used to carry out the installation must be certified/approved or specified by Ortal and are suitable for use. Do NOT install the system with different materials or objects than those approved for installation by Ortal.

WARNING: INSTALLATION AND SERVICE
Installation and repairs on the fireplace and vent system must be done by an authorized Ortal qualified installer service agency or gas supplier. If these components are not installed by an authorized Ortal dealer/installer, the warranty of all components will be void and Ortal will not be responsible for any damage caused by improper installation. The fireplace should be inspected before use and at least annually by a professional service person. More frequent cleaning may be required due to excessive lint from carpeting, bedding material, etc. Control compartments, burners and circulating air passageways of the fireplace must be kept clean. Any alteration to the product can cause soot or carbon to form and may result in damage. This damage and any other damage that results from not following the instructions outlined in this manual is not the responsibility of Ortal.

WARNING: HEAT BARRIER
A barrier designed to reduce the risk of burns from hot viewing glass is provided with this fireplace and shall be installed. The fireplace MUST not be used without the heat barrier in place. If the barrier becomes damaged, the barrier shall be replaced with the manufacturer's barrier for this fireplace. **Any safety screen, guard, or barrier removed for servicing the fireplace must be replaced before operating.**

WARNING: FIREPLACE TEMPERATURE
Due to hot temperatures, the fireplace should be located out of traffic and away from furniture and draperies.
Children and adults should be alerted to the hazards of high surface temperature and should stay away to avoid burns or clothing ignition. Clothing or other flammable material should not be placed on or near the fireplace. **Young children should be carefully supervised when they are in the same room as the fireplace**. Toddlers, young children, and others may be susceptible to accidental contact burns. A physical barrier is recommended if there are at-risk individuals in the house. To restrict access to a fireplace or stove, install an adjustable safety gate to keep toddlers, young children, and other at-risk individuals out of the room and away from hot surfaces.

WARNING: GLASS HANDLING
Only an Ortal certified installer is authorized to remove the glass using an 8-inch glass-handling suction cup.

WARNING: INSTALLATION AND OPERATION
The fireplace and accompanying components must be installed as an OEM installation in manufactured homes (USA only) or an aftermarket permanently located, or a mobile home, where not prohibited by local codes. The fireplace must be installed in accordance with the Manufacturer's instructions and the Manufactured Home Construction and Safety Standard, Title 24 CFR, Part 3280, in the United States, or the Standard for Installation in Mobile Homes, CAN/CSA Z240 MH Series, in Canada. **Exceeding the restrictions imposed in these instructions may result in a fire or explosion, causing property damage, personal injury, or loss of life. Ortal will not be responsible for any damage caused by improper installation. Do not store or use gasoline or other flammable vapors and liquids near this fireplace.**

WARNING: GAS FIREPLACE
This fireplace is for use only with the type of gas indicated on the rating plate. These fireplaces are not convertible for use with other gases unless a certified kit is used, and the conversion is performed by an authorized and qualified technician. Applicable standards are Vented Gas Fireplace Heaters ANSI Z21.88 / CSA 2.33a and Gas-fired Fireplaces for Use at High Altitudes CAN/CGA 2.17-M91

Table of Contents

General 2

Safety Information and Warnings 2

Product Information 4

Certification 4
Models 4
Rating Label 5
Zero-Clearance Stand-Offs 5

Installation 6

Prior to Installation 6

Locate the Fireplace 6

Fireplace Installation 6

First Trip to Site: Planning 6
Second Trip to Site: Installation 6
Third Trip to Site: Startup 7

Post-Installation 7

Initial Burning Period 7
Final Inspection Procedure 7
Final Checks and User Instruction 7

Building Around the Fireplace 8

Building Checklist 8

Framing 9

Framing Dimensions 9
$^{5}/_{8}$" Type X Drywall Requirements 10
Chase Floor/Platform 10
General Clearances 11
Heat Release 13
Air Intake 15
Mounting a TV/Artwork 17
Access Panel 19
Chase Area Minimum 19
Recessed Ledge Detail 20
Structural Weight Support 21

Step-by-Step Chase Construction 22

Finishing 23

Flush Installation 23
Recessed Installation 24

Venting 25

General Venting Requirements 25

Vent Installation 25

Vent Clearances 26

Offset Maximum 26

Vent Configuration Diagrams 27

Vent Restrictor Sizing Guidelines 29

Vent Termination 31

Horizontal Termination Clearance Diagram 31
Vertical Termination Clearance Diagram 33

Chimney Shroud 34

Top Open 34
Sides Open 34

Vent Maintenance 35

Co-Axial to Co-Linear Conversion 35

Vent Configuration 36

Gas 37

Gas Pressures 37

Routing the Gas Line 37

Gas Conversion 37

High Altitude Requirements 37

Gas and Electrical Components 38

Firelogs 38

Electrical 39
Electrical Requirements 39
Pairing the Remote and Receiver 39
Wiring Diagrams 40
Carbon Monoxide Detector Wiring Diagrams 44
Home Automation Wiring Diagram 46
Operation 46
10-Button Remote Control Handset 47
Operating Instructions 47
Puck Handset 48
Operating Instructions 49
Wall Switch 50
Operating Instructions 50
MyFire App 51
MyFire Wi-Fi Box 51
Fireplace Maintenance 52
General Maintenance 52

Product Information

Certification

Wilderness H Corner series fireplaces have been tested and approved by CSA Group for safety and efficiency for use with Natural Gas (NG) and Propane (LP) only, and **NOT** for use with solid fuels. **CSA Group is approved by the American National Standards Institute (ANSI) as an Accredited Standards Developer.**

Certification Standard:
US: ANSI Z21.88 – 2016: Vented Gas Fireplace Heaters
Canada: CSA 2.33 – 2016: Vented Gas Fireplace Heaters

Products:
CLASS 2901 84: DOMESTIC HEATERS (GAS) Vented Fireplace: Certified to US Standard
CLASS 2901 04: DOMESTIC HEATERS (GAS) Vented Fireplace

The fireplaces are permitted for indoor use only. “Indoor” is defined as a conditioned space. The fireplaces are not approved for outdoor or partial outdoor installation. The fireplaces must be installed while maintaining required clearances. Installation is recommended in living spaces such as bedrooms, living rooms, great rooms, etc. The fireplaces are not approved for closet installation. The fireplace must be installed according to Ortal requirements in addition to any local codes that may apply, such as USA: ANSI Z223.1/NFPA 54, Canada: CSA B149.

IMPORTANT:
- Consult the authority having jurisdiction to determine the need for a permit prior to starting the installation.
- It is the responsibility of the fireplace dealer and installer to ensure that this fireplace is installed and framed in compliance with these instructions and all applicable codes.
- Before starting, take careful note of **ALL** the **WARNINGS** in this manual.

Models

Series	Models	Burner	Certification Standard	Gas Types	Venting
Wilderness H Corner (RS/LS)	Wilderness 25H RS/LS	Dark Brown Firelog Set or Chopped Wood Firelog Set	US: ANSI Z21.88 - 2016 Canada: CSA 2.33 - 2016	Natural Gas or Propane	5”x8” Co-axial Direct Vent
	Wilderness 51H RS/LS Wilderness 60H RS/LS	Driftwood Firelog Set	US: ANSI Z21.88 - 2016 Canada: CSA 2.33 - 2016	Natural Gas or Propane	5”x8” Co-axial Direct Vent

NOTE: Venting is not supplied by Ortal with the fireplace. The fireplace is certified to be used with, and can be obtained from, the vent manufacturers outlined in “General Venting Requirements” section.

Rating Label

The fireplace rating label is found on a metal plate separate included with the fireplace.

DEALERS/INSTALLERS: You **MUST** leave the fireplace's rating label with the fireplace in an area easily accessible by the owner (typically near the access panel, if available). You must instruct the owner before handing over the fireplace where this label can be found.

OWNERS: Make sure the installer leaves your fireplace's rating label in an area that is easily accessible for you. This information is required for servicing and receiving replacement parts.

ORTAL®

Manufacturer/Fabricant
Ortal Ltd.
14 Haharash St. Hod Hasharon, 4524087
Israel
Tel: 011-972-9-7402828
Fax: 011-972-9-7402687

For use only with vent, glass and interior design media certified and approved for use with the appliance. Not for use with solid fuel. For use with barriers certified for this appliance only.

Utilisez uniquement avec des conduits, des panneaux vitrés et des accessoires décoratifs intérieurs homologués et approuvés pour une utilization avec cet appareil. Pas pour l'usage avec le combustible solide. Pour une utilisation avec des barrières certifiées pour cet appareil uniquement .

Serial No.:

Approved By:
Homologué Par:

CSA No.: 2358468

Tested to: CSA/ANSI Z21.88-2016 • CSA 2.33-2016 for Vented Gas Fireplace Heater
Examiné à: CSA/ANSI Z21.88-2016 • CSA 2.33-2016 pour Foyer au gaz à évacuation

Altitude rating: Estimation d'altitude:	0-2000 ft. / 0-610 m.	Electrical Rating: Estimation Électrique:	110 volt / 60 Hz / less than 5A

Model Series / Modèle Séries: Wilderness Driftwood

- ☐ Wilderness 44 Front RS/LS/TS
- ☐ Wilderness 44H Front RS/LS/TS
- ☐ Wilderness 44HH Front RS/LS/TS
- ☐ Wilderness Traditional 28i
- ☐ Wilderness Traditional 42
- ☐ Wilderness 51 Front RS/LS/TS
- ☐ Wilderness 51H Front RS/LS/TS
- ☐ Wilderness 51HH Front RS/LS/TS
- ☐ Wilderness Traditional 36
- ☐ Wilderness Traditional 51
- ☐ Wilderness 60 Front RS/LS/TS
- ☐ Wilderness 60H Front RS/LS/TS
- ☐ Wilderness 60HH Front RS/LS/TS
- ☐ Wilderness Traditional 36S

Fuel Type/Type de combustible:	☐ NG/GN	☐ PROPANE
Max Input / Débit max. (BTU/HR):	32,163	31,400
Min Input / Débit min.(BTU/HR):	15,696	21,400
Orifice Size / Taille de l'orifice:	320-160-320 380	90-60-90 180
Gas Inlet Pressure (W.C.) inches: Pression d'entrée de gaz (CE) pouces:	7.0	11.0
Gas manifold Pressure (W.C.) inches: Pression d'alimentation (CE) pouces:	4.7	4.7

Clearances to Combustibles (with included standoffs): Espacement par rapport aux matériaux inflammables (avec entretoises inclus):	Sides: Côtés:	0"	Back: Arrière:	0"	In front of Glass Devant le panneau vitré:	40"

Also adhere to clearance diagrams and instructions included in the ORTAL manual.
Adhérer également aux schémas d'espacement et des instructions figurant dans le manuel ORTAL.

SKU: M209-WILD-DRIFT

Wilderness Driftwood Firelog Set Rating Label

ORTAL®

Manufacturer/Fabricant
Ortal Ltd.
14 Haharash St. Hod Hasharon, 4524087
Israel
Tel: 011-972-9-7402828
Fax: 011-972-9-7402687

For use only with vent, glass and interior design media certified and approved for use with the appliance. Not for use with solid fuel. For use with barriers certified for this appliance only.

Utilisez uniquement avec des conduits, des panneaux vitrés et des accessoires décoratifs intérieurs homologués et approuvés pour une utilization avec cet appareil. Pas pour l'usage avec le combustible solide. Pour une utilisation avec des barrières certifiées pour cet appareil uniquement .

Serial No.:

Approved By:
Homologué Par:

CSA No.: 2358468

Tested to: CSA/ANSI Z21.88-2016 • CSA 2.33-2016 for Vented Gas Fireplace Heater
Examiné à: CSA/ANSI Z21.88-2016 • CSA 2.33-2016 pour Foyer au gaz à évacuation

Altitude rating: Estimation d'altitude:	0-2000 ft. / 0-610 m.	Electrical Rating: Estimation Électrique:	110 volt / 60 Hz / less than 5A

Model Series / Modèle Séries: Wilderness Dark Brown/Chopped Wood

- ☐ Wilderness 25 Front RS/LS/TS
- ☐ Wilderness Traditional 28i
- ☐ Wilderness Traditional 42
- ☐ Wilderness 25H Front RS/LS/TS
- ☐ Wilderness Traditional 36
- ☐ Wilderness Curve Tunnel
- ☐ Wilderness Traditional 36S
- ☐ Wilderness 31
- ☐ Wilderness Curve

Fuel Type: Type de combustible:	☐ NG/GN	☐ PROPANE
Max Input / Débit max. (BTU/HR):	29,861	24,130
Min Input / Débit min.(BTU/HR):	12,613	18,120
Orifice Size / Taille de l'orifice:	220-160-220 180	90-60-90 80
Gas Inlet Pressure (W.C.) inches: Pression d'entrée de gaz (CE) pouces:	7.0	11.0
Gas manifold Pressure (W.C.) inches: Pression d'alimentation (CE) pouces:	4.7	4.7

Clearances to Combustibles (with included standoffs): Espacement par rapport aux matériaux inflammables (avec entretoises inclus):	Sides: Côtés:	0"	Back: Arrière:	0"	In front of Glass Devant le panneau vitré:	40"

Also adhere to clearance diagrams and instructions included in the ORTAL manual.
Adhérer également aux schémas d'espacement et des instructions figurant dans le manuel ORTAL.

SKU: M209-WILD-DBCW-2

Wilderness Dark Brown & Chopped Wood Firelog Set Rating Label

Zero-Clearance Stand-Offs

Fireplace has zero-clearance stand-offs fastened to the body of the fireplace as shown in the figures below. Stand-offs must be fully extended upon installation.

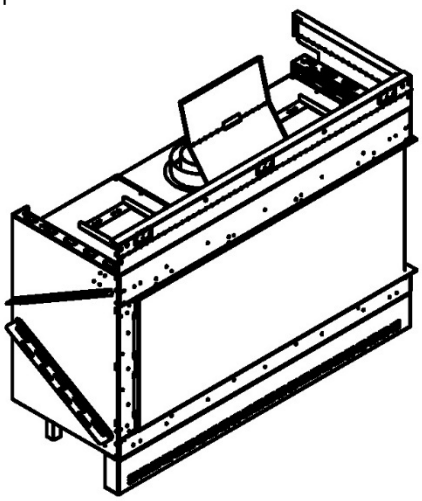

Zero-Clearance Stand-Offs (Isometric View)

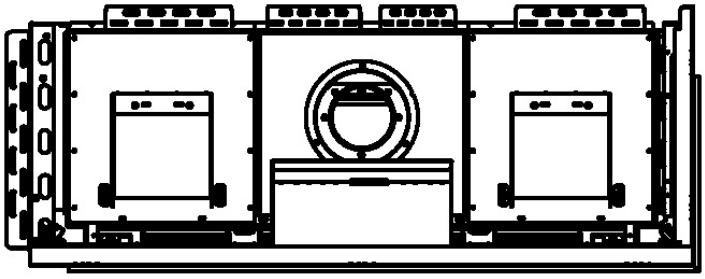

Zero-Clearance Stand-Offs (Top View)

Installation

Prior to Installation

Locate the Fireplace

Keep the following factors in mind when selecting a location for the fireplace:

- Fireplace clearance requirements (review “General Clearances” sections).
- Heat release and air intake requirements (review “Heat Release” and “Air Intake” sections).
- Adequate space for servicing.
- Access panel recommendations (review “Access Panel” section).
- Minimum vertical vent rise, allowed horizontal lengths, and degree of offset (review “Venting” section).
- Framing and finishing requirements (review “Framing” and “Finishing” sections).
    - Front wall installation and finishes to be completed after fireplace and vent installation (review “Step-By-Step Chase Construction” section).
- Floor or Platform requirements (review “Platform” section).

Fireplace Installation

Use the following guidelines to ensure a smooth installation. The installation sequence is divided into three phases: Planning, Installation, and Startup.

First Trip to Site: Planning

Consult with the contractor and go over all requirements:

- Chase framing requirements.
- $^{5}/_{8}$” Type X Drywall (or equivalent) requirements.
- Heat release requirements.
- Air Intake requirements (if applicable).
- Access panel size and location.
- Gas and electric specs and location.
- Vent configuration.
- Finishing details.

NOTE: Provide the contactor with a printed copy of the “Building Checklist” and review requirements with them.

Second Trip to Site: Installation

- Confirm the following items are properly located and built to specification:
    - Framing (with $^{5}/_{8}$” Type X Drywall as applicable)
    - Platform
    - Gas and electric
    - Access panel (if applicable)
    - Heat release
    - Air intake (if applicable)
- Clear a path free of any possible obstruction to carry in the fireplace.
- Uncrate the fireplace and set in place.
- Make sure all zero-clearance metal stand-offs on the outside of the fireplace are fully extended.
- Secure the fireplace to the framing by attaching the nailing flanges to the framing. See “Securing the Fireplace” section below.
- Remove all zip ties.
- Optional: Remove gas and electrical components from metal shipping plate if desired.
- Move the components to the access panel location. Be mindful of the routing for future service needs.
- Connect the light grounding cable to the fireplace leg closest to the access panel.
- Install the vent components. See “Vent Installation” section below.
- Review the front wall requirements (see “Step-By-Step Chase Construction” section) and finishing details with the contractor.
- Protect the fireplace and components from damage.

Securing the Fireplace

The fireplace has nailing flanges attached to the top front and right (RS) or left (LS) side of the fireplace. The nailing flanges are to be attached into the framing upon installation. It is crucial to the finishing that the fireplace is stable, level, and plumb. For added stability (though not required), re-use the shipping brackets to secure the legs of the fireplace to floor/platform.

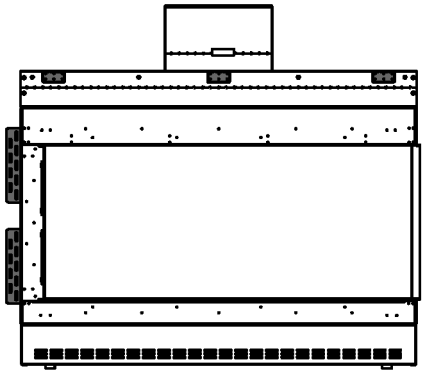

Nailing Flanges

Vent Installation

Venting must be installed according to the requirements detailed in the "Venting" section of this manual in conjunction with the vent system manufacturer's installation instructions. Venting must be supported by the structural surrounding and not by the fireplace. Each offset (elbow) must be strapped to reduce movement or possible disconnection.

The first section of venting must be secured to the fireplace starter collar with a minimum of 3 sheet metal screws no longer than $^1/_2$". DO NOT use silicone to seal the sections. If sealing is required by the vent manufacturer or local code, use Mil-Pac sealant.

Third Trip to Site: Startup

- Perform a visual inspection to confirm that all work was completed correctly and per specification.
- Confirm that gas and electric are properly connected and live.
- Remove the safety barrier and glass and clean the inside of the fireplace.
- Install the Firelogs on the burner as specified in "Log Placement" section.
- Confirm the log placement is set up per specification.
- Confirm the fireplace is operating properly.
- Check remote-control setup.
- Remove protective layer from glass.
- Clean glass.
- Reinstall the glass and safety barrier.
- Review operation of the fireplace and remote control with the owner.
- Set up return visit to clean glass after the Initial Burning Period (see "Post-Installation" section below).

Post-Installation

Complete the following post-installation steps upon 4th trip to site.

Initial Burning Period

There is a 12-hour minimum burning period following installation of the fireplace. This 12-hour period must include a minimum of 4 consecutive hours of continuous burning. During this time, the owner or installer may notice:

- The glass developing a white or "cloudy" residue
- An unusual smell

Both the residue and the smell are due to the paint on the fireplace metal heating and "burning off". This is normal. The cloudiness and odor will disappear after the 12-hour period elapses and the installer returns to service the fireplace and complete startup.

Final Inspection Procedure

When the 12-hour burning period is complete, the installer must return and perform the final inspection, which includes:

- Cleaning the glass with a ceramic glass cleaner (otherwise the white residue will remain)
- Checking the interior media setup
- Checking for gas leaks
- Adjusting the restrictor (if necessary)
- Performing an overall check to make sure that everything is working properly

When these activities are complete, initial startup is concluded and the fireplace may be operated by the owner.

Final Checks and User Instruction

Before releasing the fireplace to the customer for use without installer supervision, the installer must ensure that the fireplace is burning correctly. In addition, the installer must review and explain the following to the owner:

- Safety warnings
- Fireplace operation
- Warranty requirements
- Maintenance requirements
- Glass is hot during and after operation
- If any questions or concerns arise, owner must contact the local Ortal dealer/installer for support.

Building Around the Fireplace

Building Checklist

The following building checklist is a quick reference for a typical Ortal Wilderness H Corner Series fireplace installation. This list is not exhaustive and does not supplement thorough review of the installation manual.

- ☑ **Fireplace Location:** Ensure the location allows for min. 40” clearance from viewing area to furniture and other combustibles. Make sure a clear path is established to allow the fireplace to be safely transported to installation location.

- ☑ **Venting:** Confirm vent size (5”x8”, or 3”x5” for Power Vent), vent clearance (1” on sides and bottom, 3” on top), vent configuration, and termination location.

- ☑ **Height from Floor:** Fireplace leg height is 9 $^{13}/_{16}$” (to bottom viewing area). Legs cannot be removed/altered. If desired viewing area location on the wall is higher than 9 $^{13}/_{16}$”, a platform can be built for the fireplace to stand on.

- ☑ **Chase Floor/Platform:** Fireplace can stand on the chase floor or a platform. Floor or platform must be able to bear the weight of the fireplace. It can be constructed out of wood, concrete, metal, or any other solid materials (not required to be non-combustible).

- ☑ **Chase Construction:** No materials can be attached directly to the fireplace (exception: $^{5}/_{8}$” Type X Drywall). The area of the chase interior must meet minimum chase area requirements (depending on the model).

- ☑ **Framing:** Adhere to minimum framing dimensions (or greater). The first 10 $^{1}/_{2}$” above the top of the fireplace viewing area must always be non-combustible framing. For recessed fireplaces, do not exceed 12” max. front overhang depth limit. Side overhang has no limit. No material is permitted to extend past the metal lip surrounding the fireplace viewing area.

- ☑ **$^{5}/_{8}$” Type X Drywall Requirements:** One layer of $^{5}/_{8}$” Type X Drywall (or equivalent) must be installed on the exterior of the chase framing. $^{5}/_{8}$” Type X Drywall (or equivalent) may be fastened to the front face of the fireplace with 1" self-tapping drywall screws 16" on center a minimum of 2 ½” from the metal lip (above the viewing area).

- ☑ **TV/Artwork:** TV/Art must be min. 12” above top of fireplace viewing area. First 10 $^{1}/_{2}$” min. above the viewing area must have non-combustible framing (top front metal stand-off + non-combustible studs).

- ☑ **Gas Supply Line and Power Location:** Locate gas line with manual shut off according to local code. Power provided by a duplex outlet receptacle (120V, 15 amp, 60Hz) in same area as gas line.

- ☑ **Access Panel:** Access panel highly recommended to access gas and electrical components for servicing. Depending on the model, access panel can be placed at side or back of the fireplace within 3 feet of the pilot. Access panel is required for power-vented fireplaces. Size recommendation: as large as possible depending on application. Min. recommended size 10”x10”.

- ☑ **Heat Release:** *Crucial for Cool Wall Technology.* Must start within 6” (max.) from the chase’s ceiling. Heat release must meet minimum size (depending on the model) of net free air space. Height of the heat release must not exceed 1/3 of the width.

- ☑ **Air Intake:** Only required for double glass heat barrier. Must be located at or below level of double glass fans. Air intake must meet minimum size (depending on the model) of net free air space.

- ☑ **Finishing:** For finishes flush to the fireplace, no clearances are required. For finishes where the fireplace is recessed to the finish, maintain $^{1}/_{8}$" from the finish to the front face of the fireplace.

Framing

Fireplace chase may be framed with either combustible (typically wood studs) or non-combustible framing (typically metal studs). Any framing within 10 1/2" from the top of the fireplace glass (viewing area) must be non-combustible.

The framing of the fireplace chase must be designed to carry the entire weight of the wall and finish material. Surrounding material must not transfer weight to the fireplace or be connected in any way to the fireplace, with the exception of 5/8" Type X drywall or its equivalent.

5/8" Type X drywall may be fastened to the front face of the fireplace with 1-inch self-tapping drywall screws 16 inches on center, with a minimum of 2 1/2 inches from the metal lip (above the viewing area). No material is permitted to extend past the 1/2" metal lip surrounding the fireplace viewing area. This area must be unobstructed to allow the heat barrier and inside glass panel to be removable.

No material is permitted to extend past the 1/2" metal lip surrounding the fireplace viewing area. This area must be unobstructed to allow the heat barrier and inside glass panel to be removable.

Framing Dimensions

The following diagrams are for illustrative purposes only. There are multiple approved installation scenarios. A flush application is not the only permitted application. The fireplace may be recessed into the wall. Refer to diagrams and values below and in the following pages for details.

Wilderness H Corner Series Framing

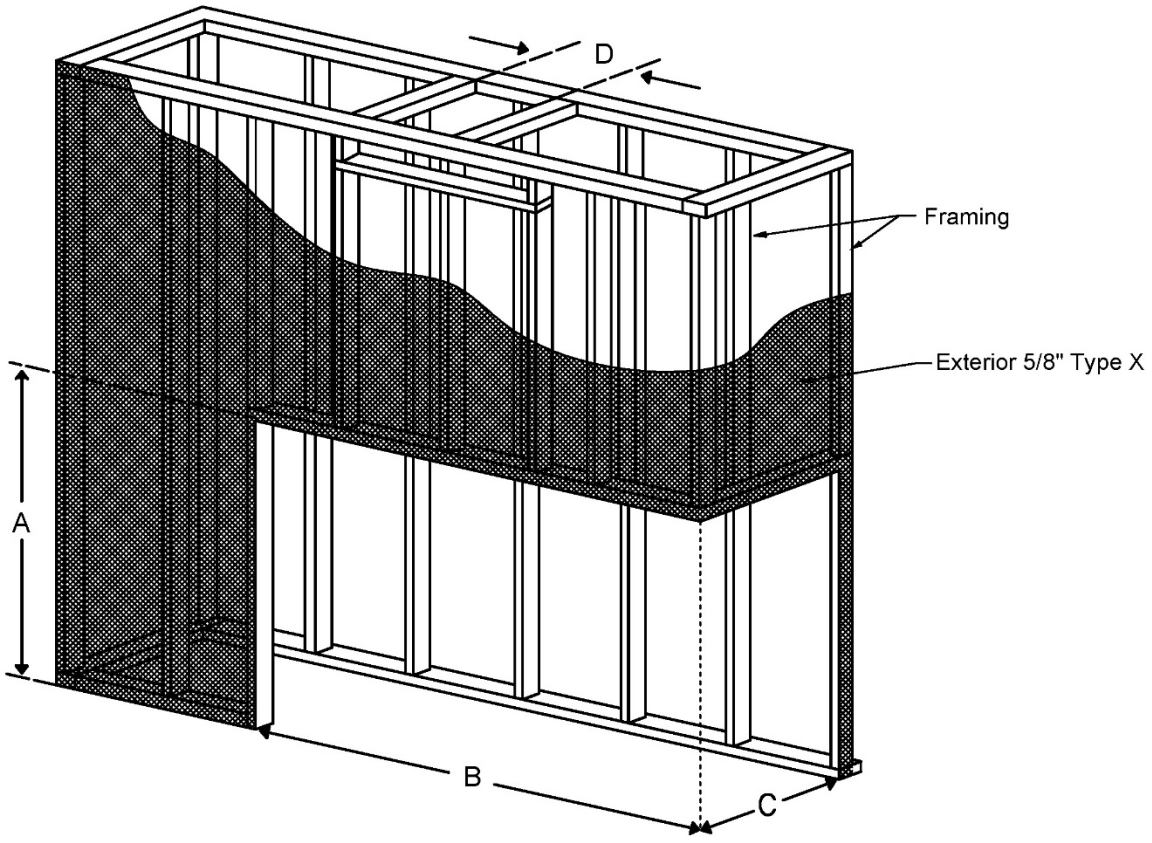

Model	Dimension A	Dimension B	Dimension C	Dimension D
Wilderness 25H RS/LS	43 7/8"	32 3/4"	24 3/4"	Refer to pipe manufacturer's firestop dimensions
Wilderness 51H RS/LS	41 3/4"	57 5/8"	21 5/8"	
Wilderness 60H RS/LS	41 3/4"	67 1/2"	21 5/8"	

5/8” Type X Drywall Requirements

Framing must be covered with 5/8” Type X Drywall (or equivalent). The chase interior does not require a layer of 5/8” Type X Drywall (or equivalent). The chase interior does not require a non-combustible layer.

NOTE: 5/8” Type X Drywall (or equivalent) is not required on the exterior portion of an insulated outside-facing wall.

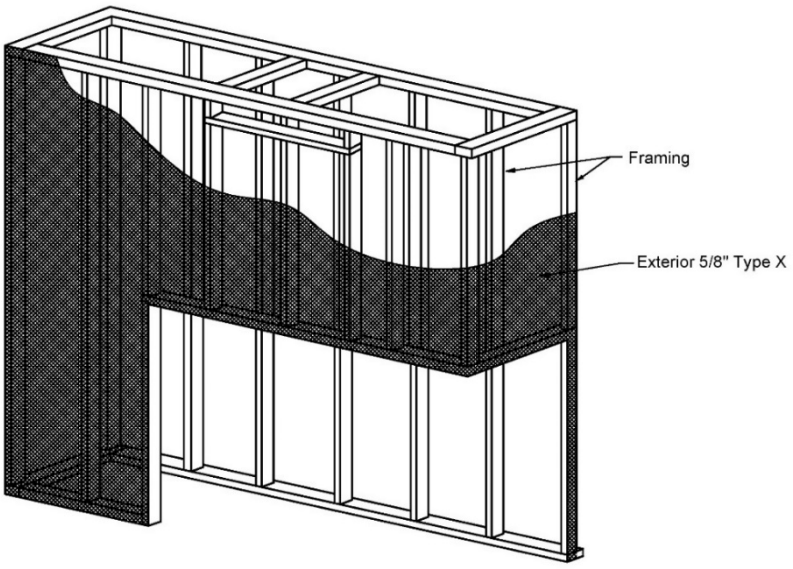

Chase Floor/Platform

The fireplace must be installed on a flat, solid, continuous surface. Surface can be wood, concrete, metal, and other typical solid floor types. Surface material is not required to be non-combustible.

Fireplace leg height is 9 13/16” (measured to bottom of viewing area). Legs cannot be removed, cut, or adjusted.

Raised Platform Option: To raise the fireplace higher than 9 13/16” height, build a platform for the fireplace to stand on. Platform must be stable and able to bear the full weight of the fireplace. Platform can be constructed out of wood, concrete, metal, or any other solid materials. Platform material is not required to be non-combustible.

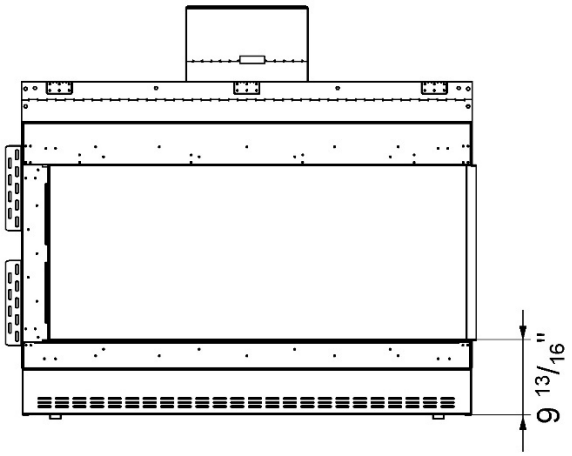

Fireplace Leg Height

NOTE: For fireplaces with the double glass heat barrier, an air intake might be necessary to incorporate into the platform depending on the design. See “Air Intake for a Platform” for details.

General Clearances

Viewing Area Clearance Zone

The viewing area clearance zone is an area that extends perpendicular from the fireplace viewing area. The depth of the viewing area clearance zone depends on the combustibility of the material in question. Distance is measured from the fireplace heat barrier.

Non-Combustible Materials	Must be minimum **12 inches** from fireplace viewing area.
Combustible Materials	Must be minimum **40 inches** from fireplace viewing area.

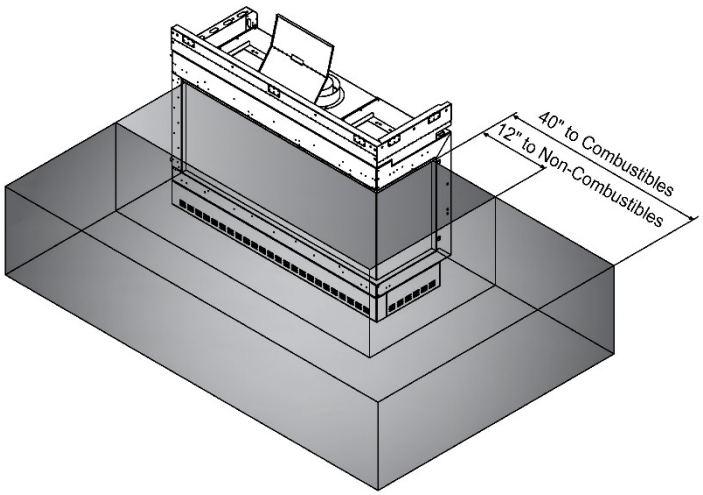

Materials (including combustible flooring and combustible finish material) are permitted below and around the viewing area clearance zone.

IMPORTANT NOTE: When placing material near the glass, take care to consider fireplace serviceability. It is strongly recommended that any items/materials placed in front of the front (long) glass be movable for easy access to the fireplace during servicing.

Clearance to a Side Wall

The fireplace viewing area is zero-clearance to a side wall. A side wall is defined as a wall that meets the viewing area at a 90° angle.

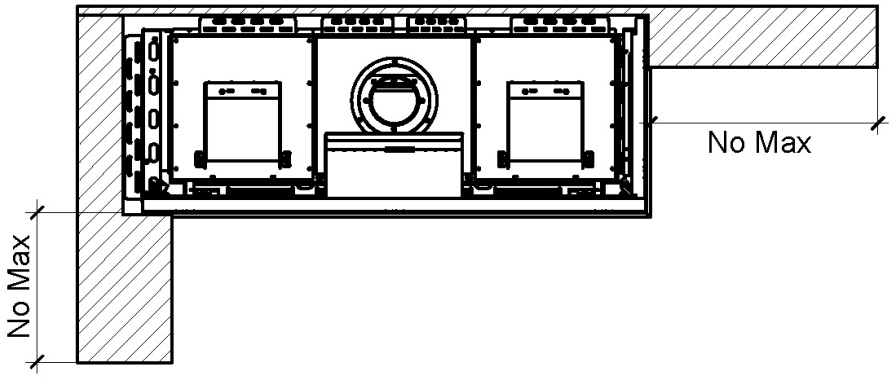

= Building Material

The temperature on the side wall can get as high as 150°F above ambient temperature. While the fireplace certification allows for this temperature variance, building and finish materials will have their own limitations. Consult the material manufacturer to ensure the material can safety withstand this temperature range.

This information does not apply to a wall that is constructed in front of the viewing area. For materials that will be in front of a main or side viewing area, please refer to the “Viewing Area Clearances” section.

Maximum Overhang Depth

Overhang depth of a recessed fireplace must not exceed **12 inches**. Overhang depth is measured from the edge of the fireplace lip to the out-most part of the wall (including finish material). Side overhang has no limit.

Bottom recess (or “hearth extension”) has no minimum or maximum depth requirement. If bottom recess depth exceeds 12 inches, ensure the structure is capable of supporting the weight of a fireplace technician for servicing.

Front Overhang	Side Overhang
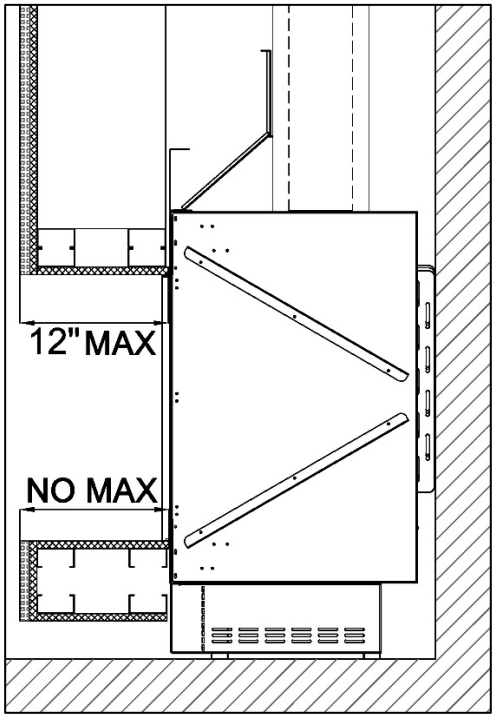 Section View	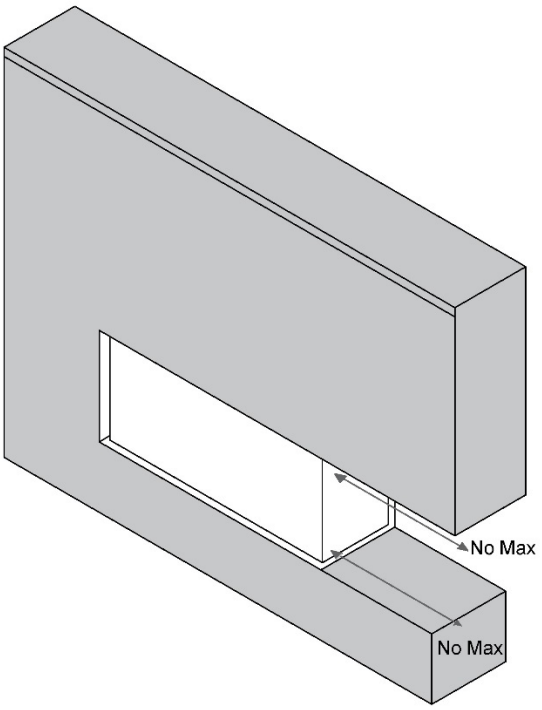 Isometric View

Heat Release

A heat release is an opening in the fireplace chase that allows the heat inside the chase to passively circulate into an interior room. This heat is generated convectively as the fireplace heats up. It is separate from exhaust heat produced at the combustion chamber of the fireplace. For safety purposes, a **heat release is required** to keep the wall around the fireplace cool.

Heat Release Requirements

- The heat release must be located at or near the top of the fireplace chase and ***start within*** 6 inches (0-6 inches max) of the chase ceiling/firestop. It can start at the chase ceiling. It can be located on the front, sides or back of the chase. It can be released into any interior space that shares a wall with the chase.
- Minimum heat release size requirement depends on heat release orientation:

Fireplace Series	Horizontal Heat Release	Vertical Heat Release
25H-51H	Minimum 124 sq. in. of free air space	Minimum 160 sq. in. of free air space
60H	Minimum 200 sq. in. of free air space	Minimum 260 sq. in. of free air space

- For horizontal heat releases only, the height of the heat release must not exceed 1/3 of the width. (This does not apply to vertical heat releases.)
- The space the heat release vents into must have a minimum volume of 184 ft^3.
- The heat release can be in the form of (but not limited to) a louvered ventilation grille, gap, or reveal.
  - For louvered/perforated ventilation grilles, the net free air space allowed in the louvered area must be equal or greater than the minimum number of square inches required per fireplace.
- The interior area of the narrowest part of the fireplace chase (in square inches) must never be less than your required heat release size (see “Chase Area Minimum” section for details).
- The heat release cannot be vented outdoors as this would expose the fireplace to outdoor elements.

NOTE: An angled heat release is not permitted.

The following diagrams are examples of potential heat release options. These drawings serve as illustrative purposes only.

Horizontal Heat Release

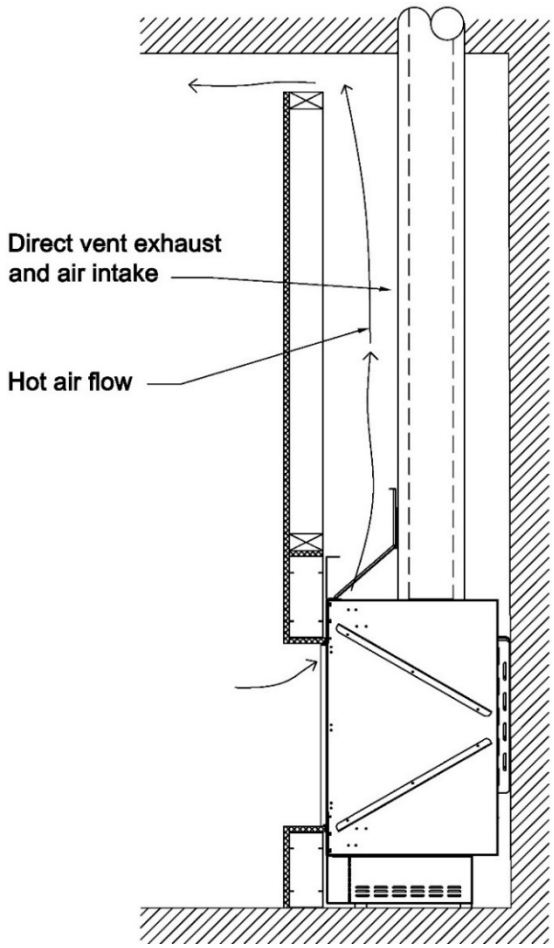

Reveal Heat Release

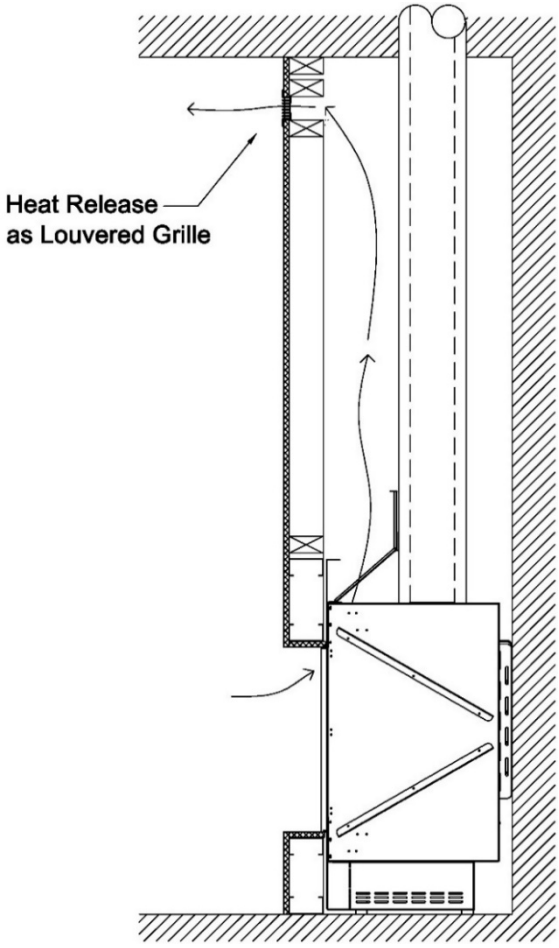

Louvered Grille Heat Release

Vertical Heat Release: Split Front

The heat release is oriented vertically and split between the two sides of the chase.

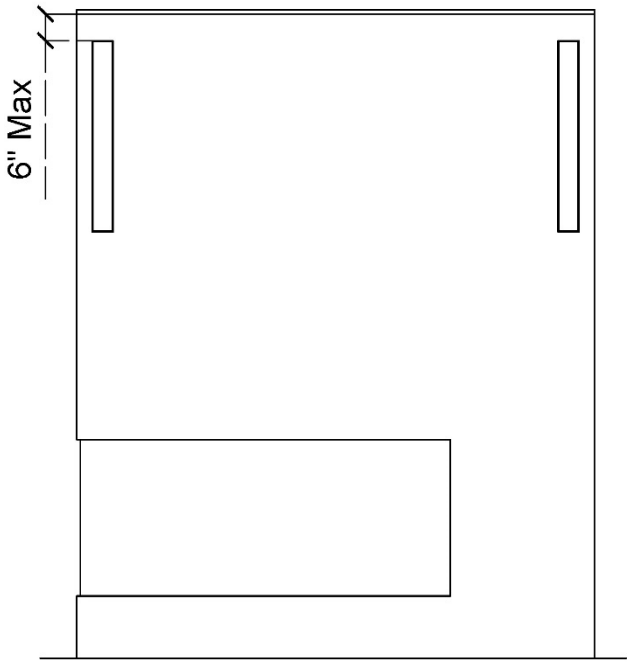

Split Front Vertical Heat Release

Vertical Heat Release: Full Side

The heat release is oriented vertically. Entire heat release is on one side of the fireplace chase.

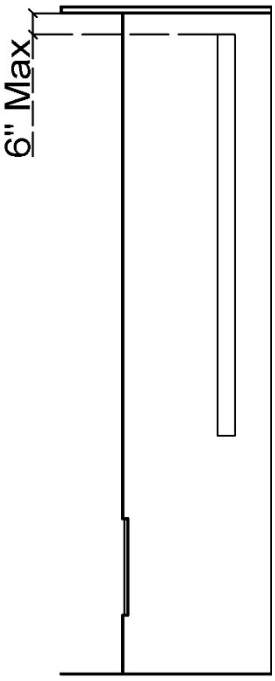

Full Vertical Heat Release on One Side

Sprinkler Clearance to Heat Release

In a situation where a sprinkler head is near the heat release, the sprinkler head must be minimum **24 inches** (linear length) from every point of the heat release opening.

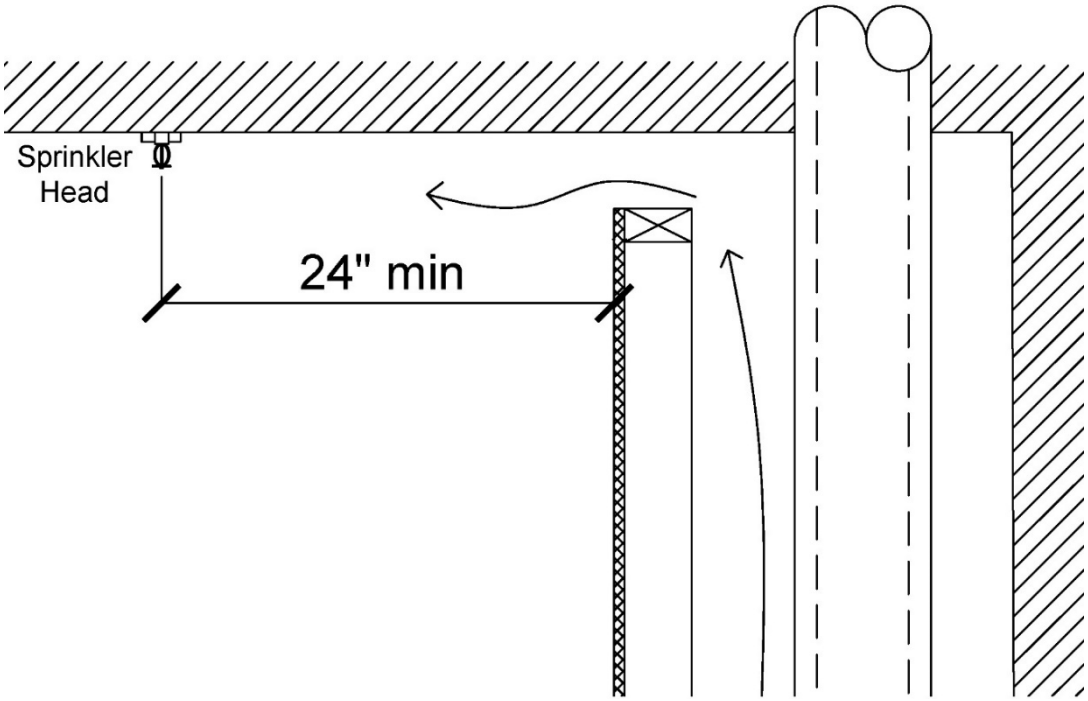

Air Intake

When installing a fireplace with a double glass heat barrier, it is essential to maintain cool air flow between the double glass panels. For this purpose, an opening must be provided toward the bottom of the wall to allow the double glass fans to circulate room air through the glass panels and up into the chase. This opening, called an air intake, needs to be made before closing the wall surface below the fireplace. Air intake must meet the minimum size requirement.

Fireplace Series	Air Intake
25H-51H	Minimum 124 sq. in. of free air space
60H	Minimum 200 sq. in. of free air space

The air intake can be in the form of a louvered ventilation grille, gap, or toe-kick (reveal). For louvered ventilation grilles, the net free air space allowed in the louvered area must be equal or greater than the minimum number of square inches required per fireplace.

The entire air intake must be located at or below the level of the double glass fans. The air intake is not required to be on the front wall of the fireplace. The air intake cannot be on a wall that allows air from outside the house directly into the fireplace chase. Air must be from a conditioned space. **Air flow must be able to get to the double glass fans through the air intake slots in the protective bracket at the bottom of the fireplace.**

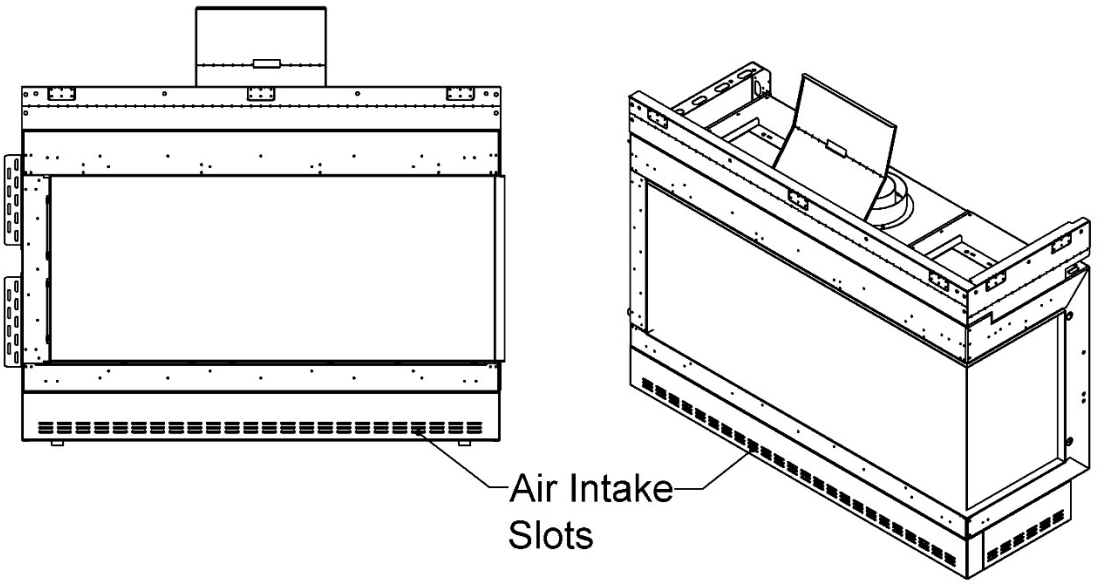

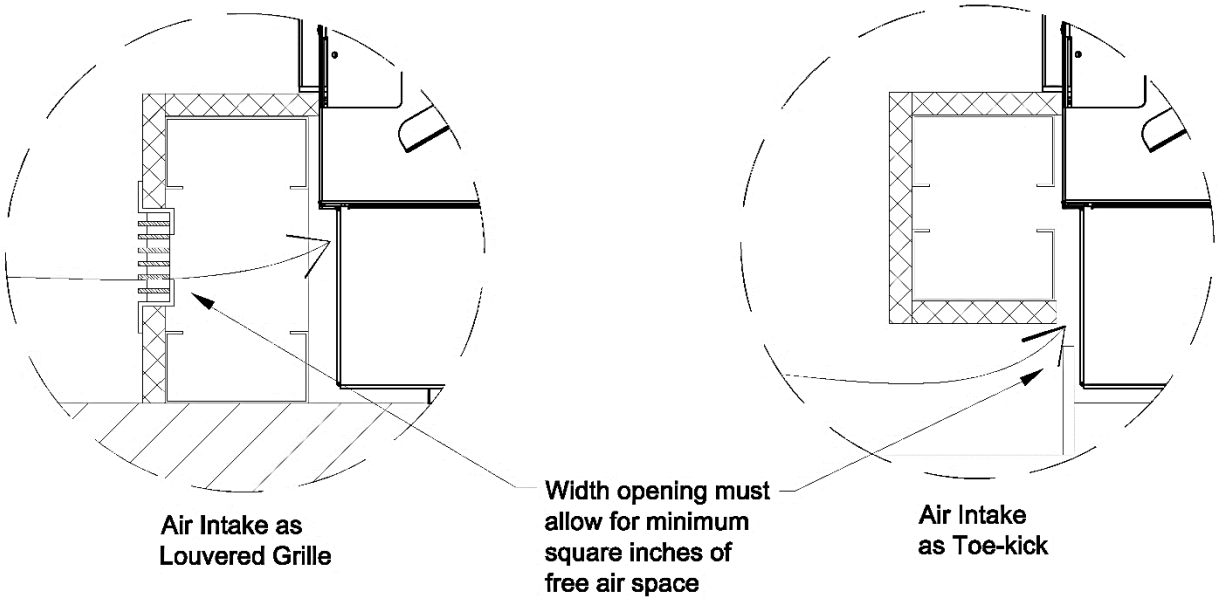

Air Intake for a Platform

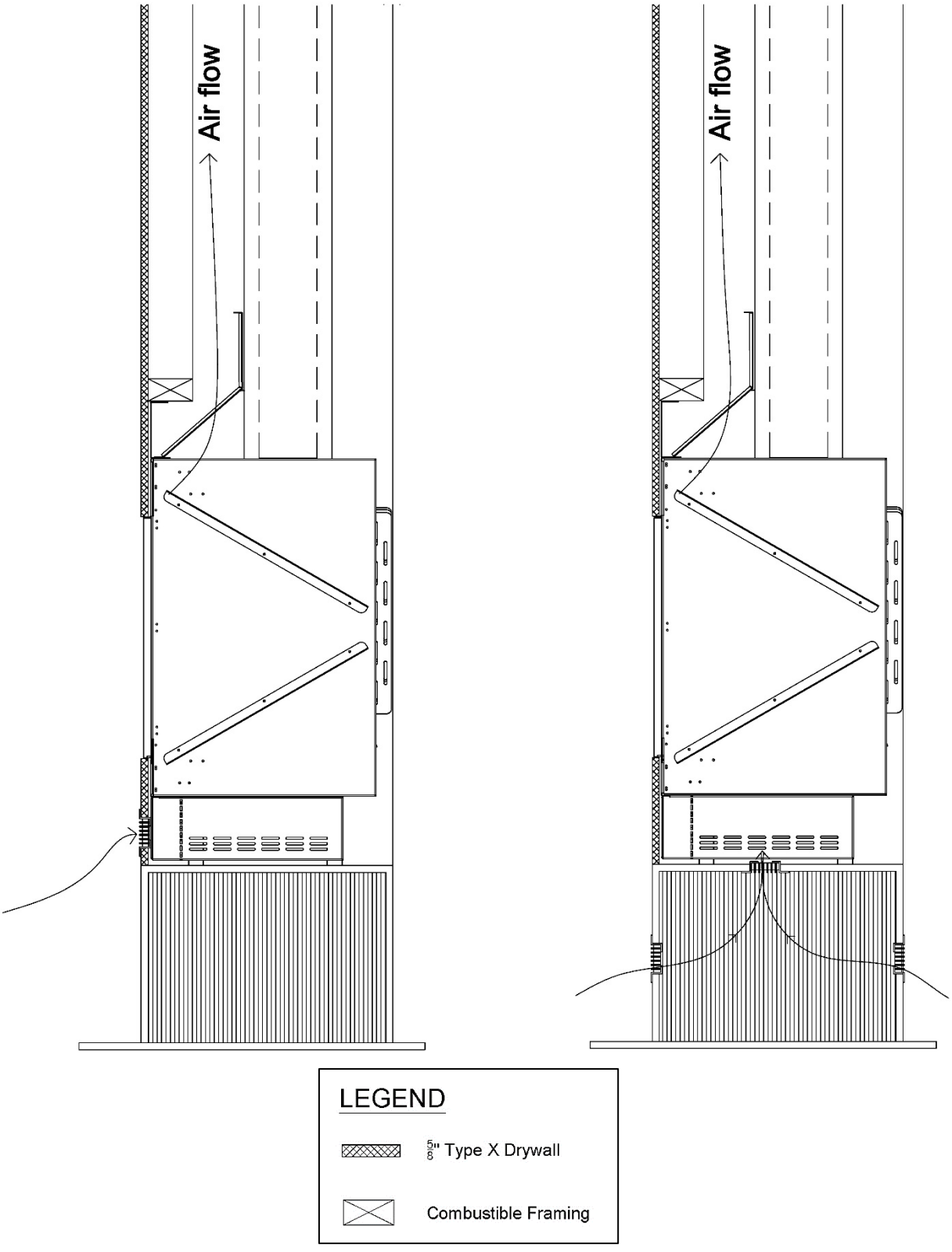

NOTE: Please refer to the "Platform" section for details on platform construction.

Mounting a TV/Artwork

Ortal's Cool Wall Technology is a technique that reduces the convective heat from the fireplace and prevents heat buildup inside the fireplace chase, mitigating any damage that may result from the wall reaching high temperatures. Ortal's Cool Wall system enables the option of safely installing artwork, a TV, or other similar electronic components above the fireplace by reducing the wall temperature above the fireplace.

Location	Wall Temperature
0-6 inches above fireplace	100˚F - 120˚F
6-12 inches above fireplace	90˚F - 100˚F
12 inches above fireplace	80˚F - 90˚F

Required minimum clearance between bottom edge of TV or other similar device or artwork and top of fireplace viewing area is 12 inches.

Maintain the following general requirements to mount a TV or artwork above the fireplace and prevent heat damage:

- Mount the TV or artwork a minimum of 12 inches above the top of the fireplace viewing area.
- Wires inside the chase are not permitted to cross over the fireplace. Wires must be installed against a wall.

The decision to install a television above an Ortal fireplace is up to the discretion of the owner. TV and art manufacturers may specify that their product should not be installed on, near or above a heat source. Ortal will not be held liable for any adverse effects on a TV, artwork or other equipment located near the Ortal fireplace. It is the owner's responsibility to verify that their TV or artwork can withstand the wall temperatures as outlined in the above wall temperature chart.

The following diagrams can be used as a guide for customers who do decide to locate their TV and artwork above their Ortal fireplace. These drawings illustrate ways of reducing the amount of heat impact to the area surrounding the fireplace.

Flush Mounted TV/Artwork

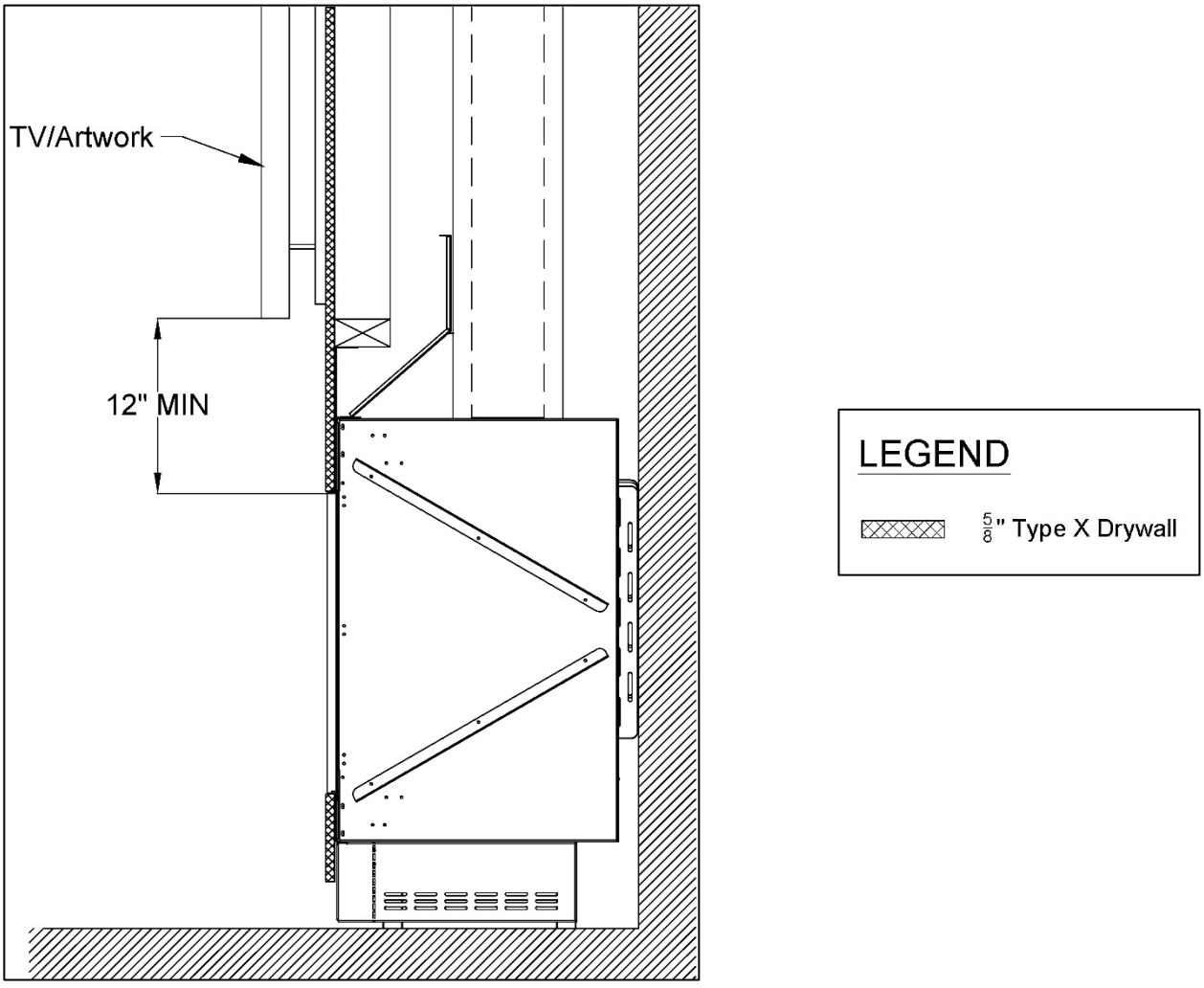

Recessed TV/Artwork

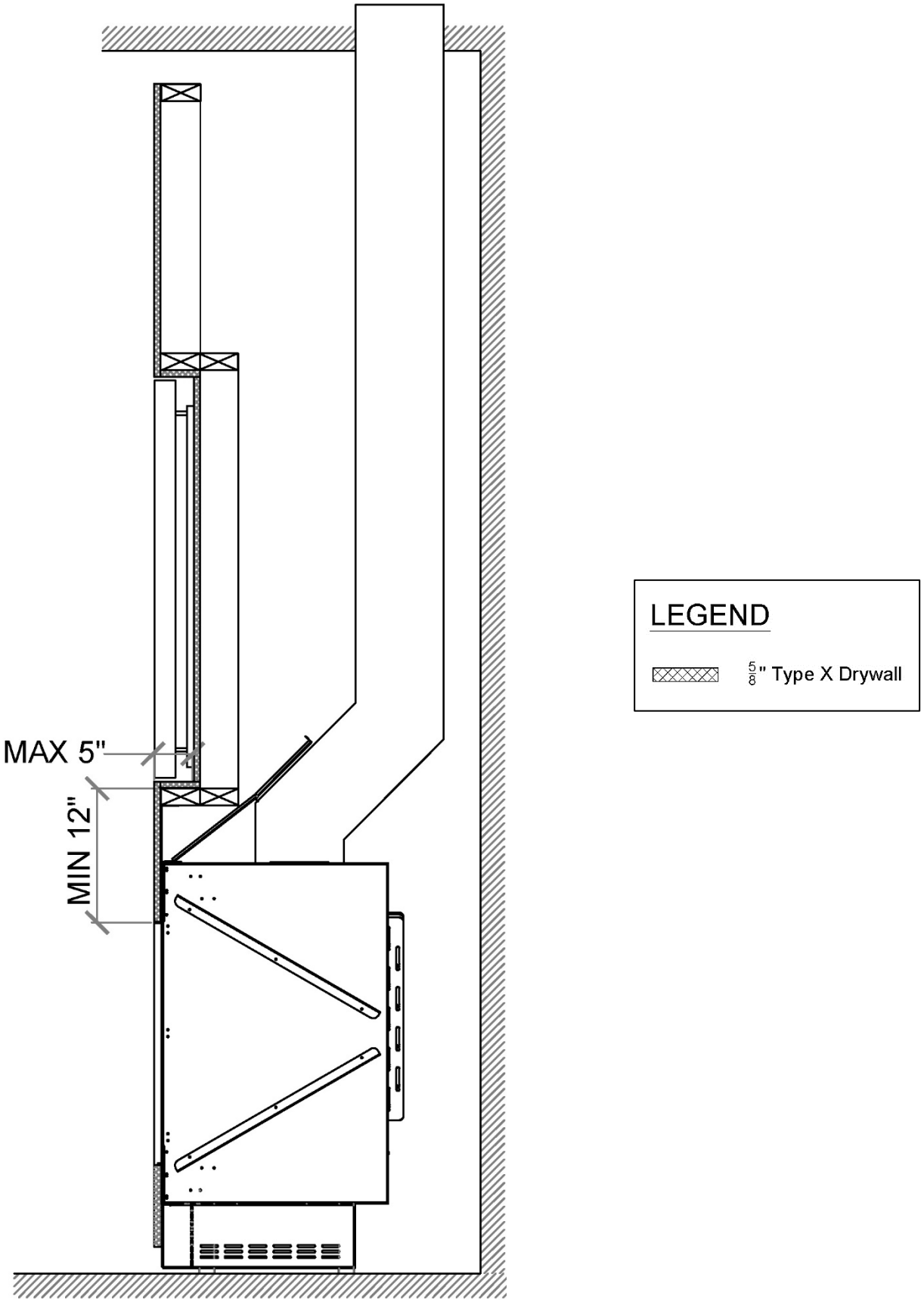

NOTE: Vent clearances must be maintained. See “Vent Clearances” section for details.

Access Panel

An access panel is not required (see note below for exception), but it is ***highly recommended***. It allows for access to the fireplace's gas and electrical components for servicing.

NOTE: An access panel at the fireplace is *required* for fireplaces with a power vent to allow access to the power vent control box for servicing.

Access Panel Size and Location Recommendations:

- Size: as large as possible depending on application. Minimum is 10"x10".
- Located within 36 inches of the pilot to the side or back of the fireplace (see "Routing the Gas Line")

The size and location of the access panel may vary, but in all cases, it must allow the technician to comfortably access and service the fireplace's gas and electrical components. These components are attached to the pilot on a flexible gas line and can be moved within 36 inches of the pilot (located at the center front of the burner) to the side or back of the fireplace.

For ease of access, move the fireplace's gas and electrical components as close to the access panel as possible**. If there is any distance between the access panel and the gas and electrical components, the access panel size must be increased accordingly.** Prior to installation, fireplace dealers/installers should work with the owner, builder, project architects and/or interior designers to determine the best size and location of their access panel.

If an access panel cannot be incorporated, the alternative method of servicing the gas and electrical components is though the fireplace. This procedure requires removing the glass panel(s) and interior design media, and lifting the grill, burner, and bottom pressure release valve. This will increase service time and difficulty. An access panel is always preferred. Fireplace dealers/installers are advised to consult with their clients regarding the advantages and disadvantages of each service option.

The protective bracket at the bottom of the fireplace blocks service access to gas and electrical components. The protective bracket is installed under the glass panel sides of the fireplace, and the location of accessibility varies per model.

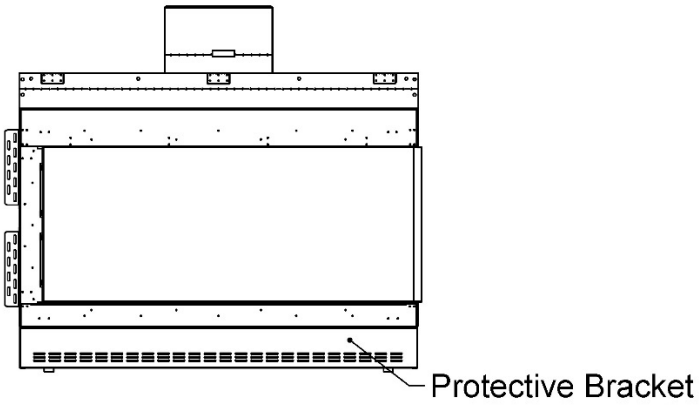

NOTE: If local code requires an access panel, defer to local code requirements.

Chase Area Minimum

To ensure the convective heat within the chase passively moves to the heat release at an optimal rate, all parts of the interior of the chase must at least the same size as the fireplace heat release (see "Heat Release" section to determine your model's required heat release size) at size at any given point. To determine if your chase meets this requirement, use the following equation at the narrowest part of the chase.

Chase Area = (Chase Length x Chase Depth) – (Area of the Pipe)

Area of the Pipe:

5"x8" venting = 50.27 in^2

3"x5" venting* = 19.63 in^2

*Used for Power Venting only

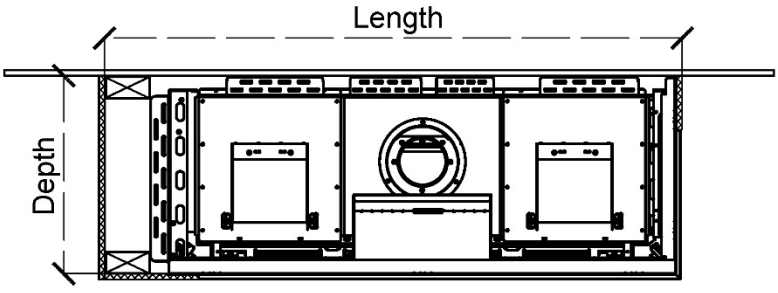

Fireplace Chase (Top View)

If the heat release is split into 25/75 portions due to an oversized ledge, the chase only needs to be the size of 75% of the heat release because 25% of the heat is already being released at the ledge (see "Recessed Ledge Detail" section for details).

Recessed Ledge Detail

A ledge over the top of a fireplace that is less than 24 inches from the top of the fireplace viewing area must maintain a minimum of **12 inches from the top of the viewing area to the top of the framing**. **Entire structure must be non-combustible (framing and finish).**

Fireplace Series	Maximum Ledge Surface Area
25H	A x B ≤ 220 sq. in.
51H	A x B ≤ 340 sq. in.
60H	A x B ≤ 410 sq. in.

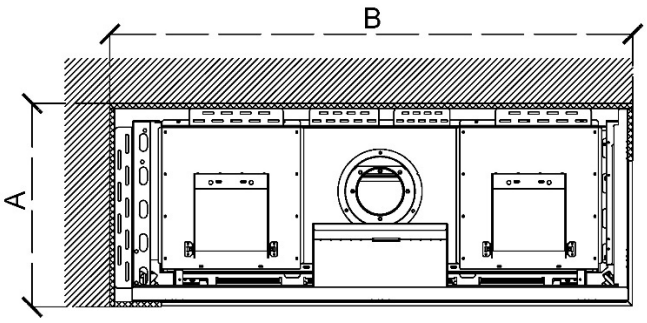

A = ledge depth, B= ledge width (Top View)

Oversized Ledge

If ledge surface area exceeds the values shown in the chart above, the heat release must be divided between the ledge and the chase ceiling: 25% at the ledge and 75% at the chase ceiling.

NOTE: Chase area minimum requirements must be met throughout the entire fireplace chase. See "Chase Area Minimum" section above for details.

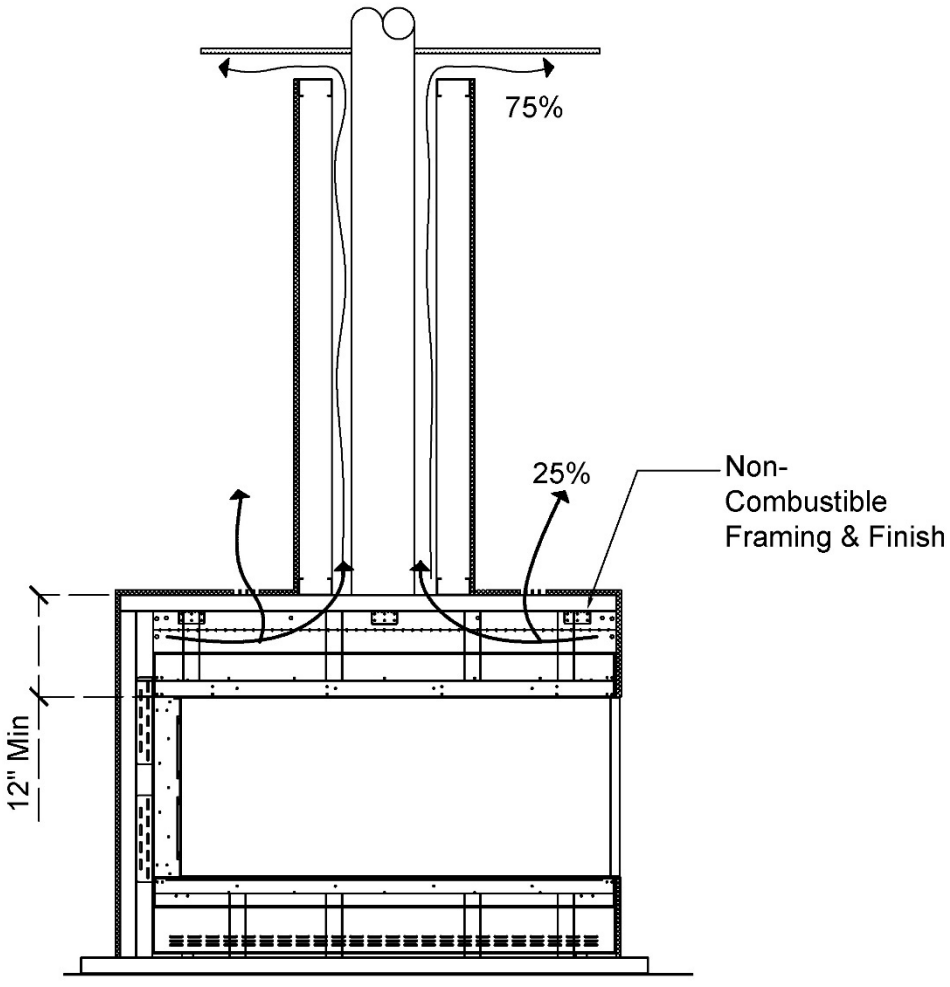

Oversized Ledge

Structural Weight Support

The fireplace must not carry any structural weight. The framing must be supported by another surface. Consult with the project structural engineer and refer to your local building codes for proper wall support.

The following drawing shows a recommended approach to this type of installation. Please note that these drawings are not to scale. All fireplace drawings with correct dimensions are available on the Ortal website.

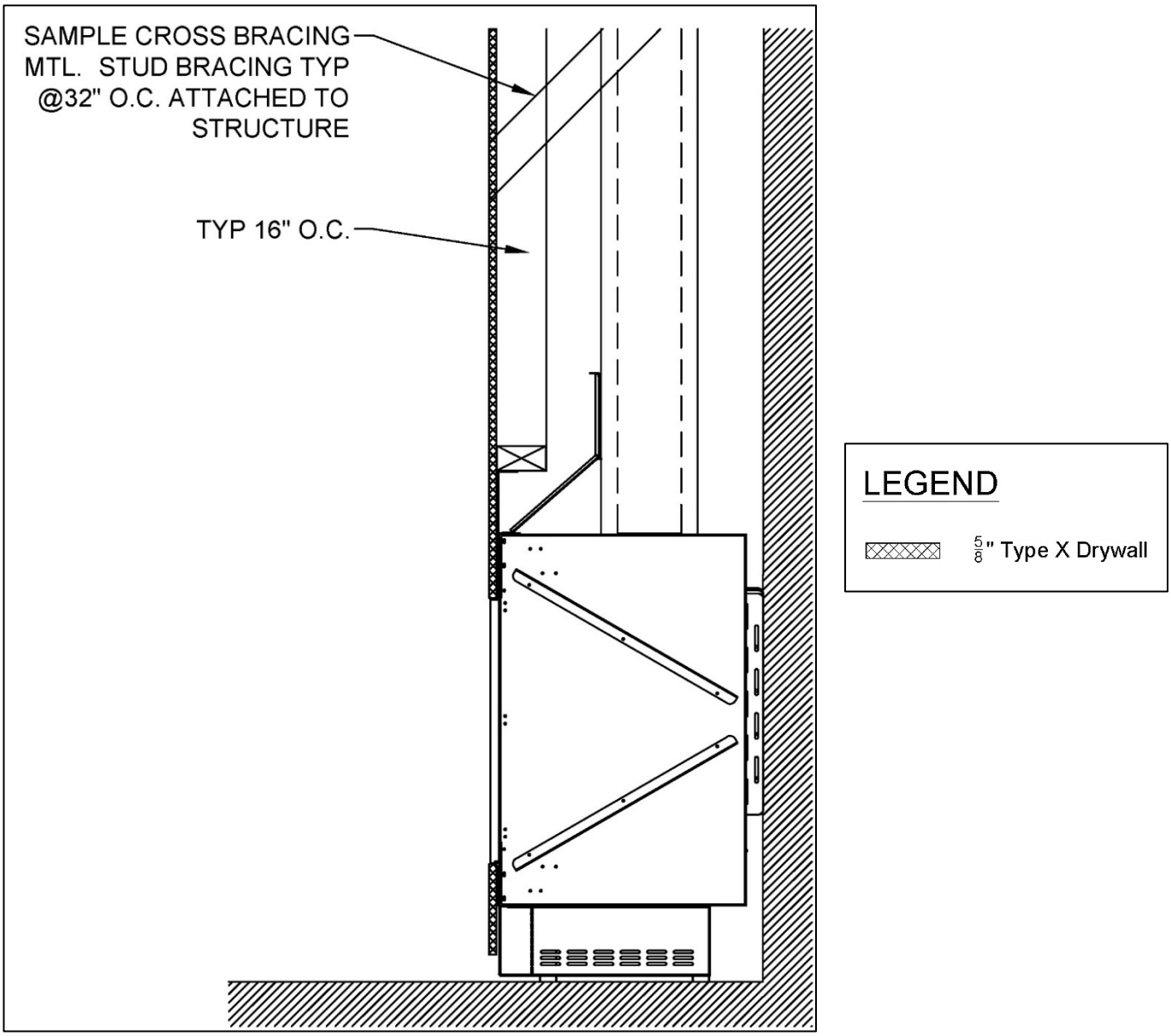

Step-by-Step Chase Construction

The following checklist is a simplified overview of typical chase construction for an Ortal Wilderness H Front Series fireplace installation. This list is not exhaustive and does not supplement thorough review of the installation manual.

Step 1

BUILD BACK AND SIDE WALLS

- ☑ Frame the back and side walls according to framing requirements.
- ☑ Build the platform (if necessary) to the desired height and install inside fireplace chase.
  - Platform must be stable and able to bear the full weight of the fireplace. Platform can be constructed out of wood, concrete, metal, or any other solid materials. Material is not required to be non-combustible.

Step 2

INSTALL FIREPLACE AND VENTING, RUN GAS AND ELECTRICAL

- ☑ Install the fireplace and venting. This must be completed by an authorized Ortal dealer (unless otherwise authorized by Ortal with written approval).
- ☑ Move the gas valve and receiver unit to the designated access panel location. If the fireplace will not have an access panel, keep gas valve and receiver unit directly underneath the fireplace.
- ☑ Run gas and electric to the gas valve and receiver unit location.

Step 3

BUILD FRONT WALL

- ☑ Install front chase wall:
  - Build front wall according to framing requirements.
  - Stand up the front wall and move into place.
  - Secure front wall to the rest of the chase structure.
- ☑ Cover the exterior of each wall (sides, front, and back, as applicable to your design) with $^{5}/_{8}$" Type X Drywall (or equivalent) and seal gaps with a non-combustible fire sealant.

NOTE: $^{5}/_{8}$" Type X Drywall (or equivalent) is not required on the exterior portion of an insulated outside-facing wall.

- ☑ Check to make sure constructed chase meets the requirements for heat release (for all models) and air intake (for double glass models).

Step 4

APPLY FINISHES

- ☑ Apply finishes and install accessories, following all clearances and building requirements.
- ☑ Ensure furniture and other combustible materials maintain a minimum 40 inches of clearance directly in front of the fireplace viewing area for both front and side viewing areas (as applicable).

Finishing

The following diagrams show various finish applications. **Diagrams apply to both combustible and non-combustible finish material.**

IMPORTANT NOTES:

- All recessed installations must comply with applicable maximum overhang limit and side wall clearances. See “Maximum Overhang Depth” and “Clearance to a Side Wall” sections for details.
- No material is permitted to extend past the metal lip surrounding the fireplace viewing area. This area must be unobstructed to allow the heat barrier and inside glass panel to be removable.
- MANUFACTURED STONE: A minimum 2-inch recess is suggested. Consult stone manufacturer for clearance requirements.
- $^{5}/_{8}$” DensGlass® Fireguard® Sheathing is an approved $^{5}/_{8}$” Type X Drywall equivalent. This may be necessary for use with heavier finishes.

WARNING: Wood finish or floor/hearth extension may dry out, crack, warp or become discolored over time. Consult with floor manufacturer for required clearances to a heat source.

Flush Installation

Diagram applies to both combustible and non-combustible finish material.

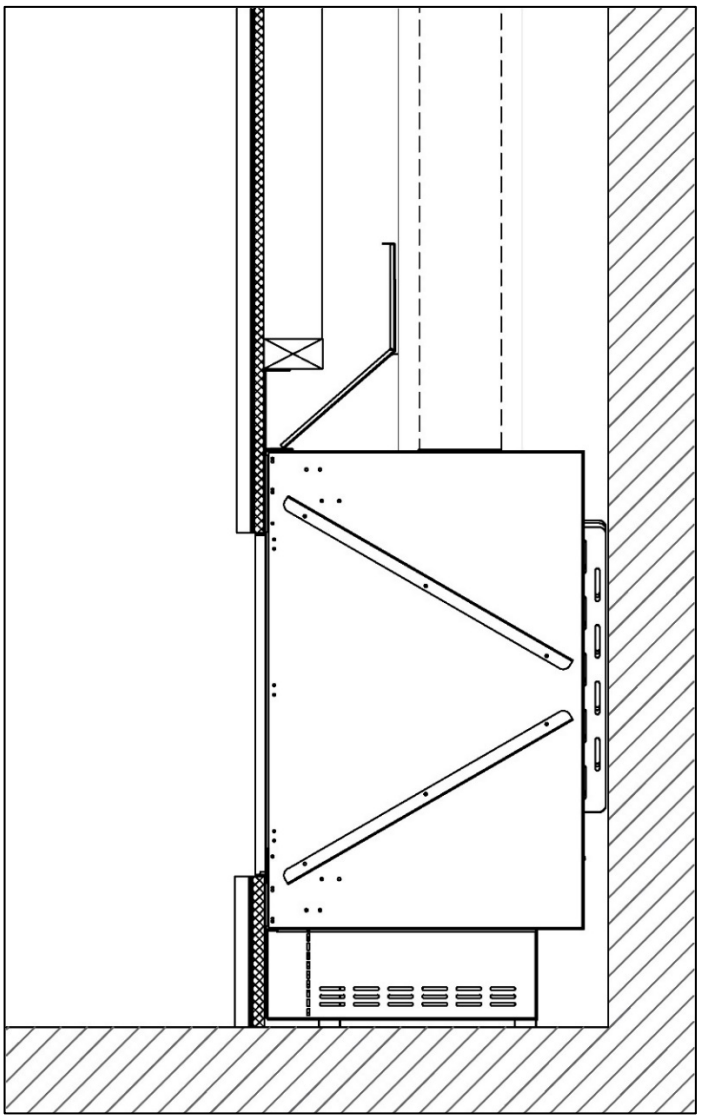

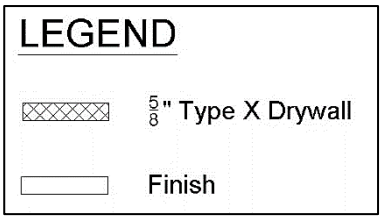

Recessed Installation

Diagram applies to both combustible and non-combustible finish material. The finish must maintain at least a 1/8" clearance to the fireplace to both the top and bottom recesses.

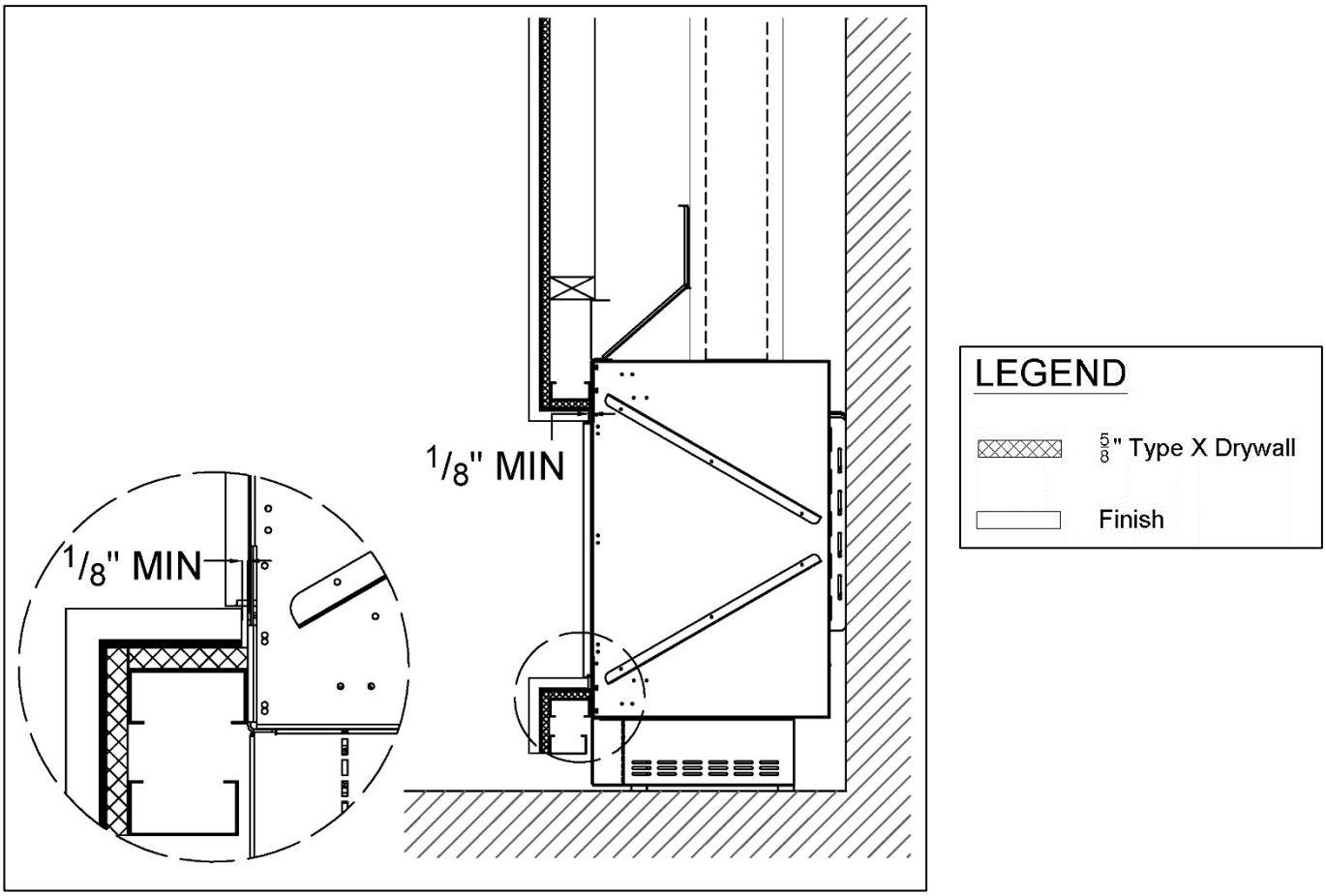

Venting

General Venting Requirements

The fireplace operates using a direct vent system and require a co-axial direct vent pipe. The fireplace must be properly connected to an approved vent system. Venting is not provided with the fireplace and must be sourced from one of the approved vent manufacturers mentioned in the table below. Proper installation, use, and maintenance of venting is determined by and can be acquired from the vent manufacturer.

Vent Requirements			
Fireplace Series	**Vent Type**	**Vent Size**	**Approved Vent Manufacturers**
25H 51H 60H	Direct Vent	5x8 co-axial direct vent pipe (5” interior, 8” exterior)	Olympia: Ventis DuraVent: Direct Vent Pro ICC: EXCELDirect BDM: Pro-Form Direct Vent System Selkirk: Direct-Temp System
	Enervex Power Vent		
	Ortal Power Vent*	3x5 co-axial direct vent pipe (3” interior, 5” exterior)	DuraVent: CVS line

Power Vent: a fan-assisted direct vent system that boosts airflow for vent configurations with too much constriction. Review “Vent Configuration Diagrams” section to determine if your fireplace needs a power vent.

NOTE: See the Ortal Power Vent Manual for more details on power venting.

TERMINATION CAP NOTE: Low Profile Termination Cap and Sconce Termination Cap can negatively impact flame appearance and are not recommended for use with the fireplace.

WARNING: Do not combine vent components from different vent manufacturers. Please follow the manufacturer’s instructions for vent system installation.

Vent Installation

Venting must be installed to meet the requirements as detailed in the following sections in conjunction with the vent system manufacturer’s installation instructions. Venting must be supported by the structural surrounding and not by the fireplace. Each offset (elbow) must be strapped to reduce movement or possible disconnection.

The first section of venting must be secured to the fireplace starter collar with a minimum of 3 sheet metal screws no longer than ½”. DO NOT use silicone to seal the sections. If sealing is required by the vent manufacturer or local code, use Mil-Pac sealant.

WARNING: Do not combine vent components from different vent manufacturers. Please follow the manufacturer’s instructions for vent system installation.

Vent Clearances

The following clearances apply to the vent system regardless of vent manufacturer.

Vent Clearances	
Sides: 1”	Applies to entire circumference when venting is oriented vertically. Clearance is to ***any*** material.
*Top: 3”	Applies to venting oriented horizontally or at an angle. Clearance is to ***any*** material.
Bottom: 1”	

*Exception: Wall thimble top clearance to any material is 1”.

Minimum Vertical Rise (V minimum)	
3 feet	Required from the top of the fireplace before any offset can be used*

***See “Offset Maximum Exception" below.**

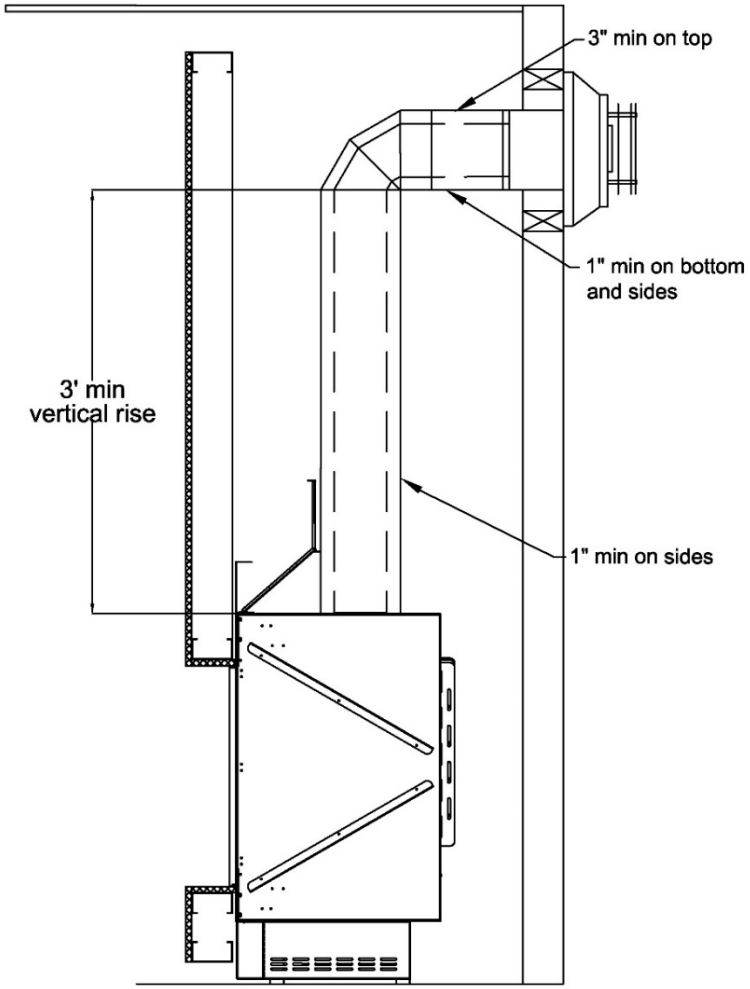

Offset Maximum

Up to 180˚ of offset (elbows) can be used in the vent configuration. If the vent configuration exceeds this maximum, consider an Ortal Power Vent System, which can allow for up to 540˚ of offset. See the Ortal Power Vent Manual for details.

Offset Maximum Exception

Two 45˚ offsets may be used directly on the fireplace with up to a 12" section between them. The minimum vertical rise starts above them. They do not count in the offset total.

NOTE: If the initial vertical vent rise off the top of the fireplace does not meet the V minimum, consider an Ortal Power Vent System, which can allow for any initial vertical rise amount. See the Ortal Power Vent Manual for details.

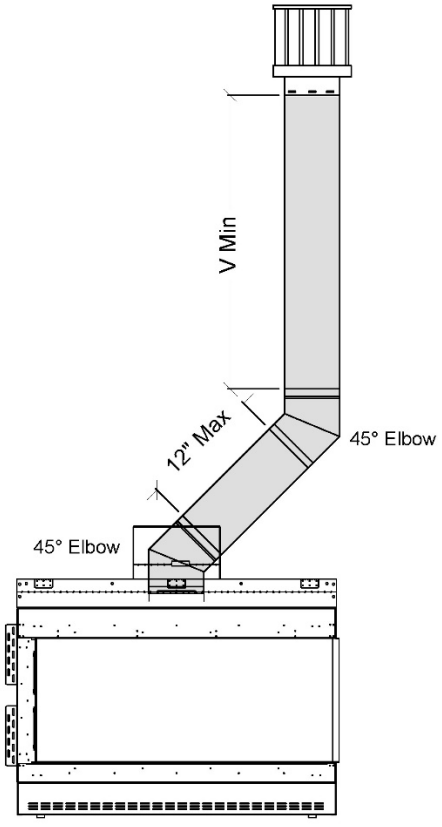

Vent Configuration Diagrams

The following sections provide information for calculating vent configuration distances. For vent configurations that exceed these maximums, consider Ortal's Power Vent System. See the Ortal Power Vent Manual for details.

NOTE: It is not required to maintain 1/4" of rise per foot of venting.

Horizontal Termination Venting Diagram

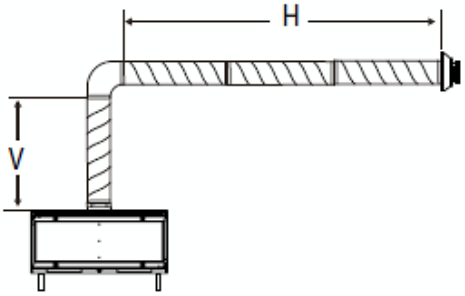

Use this diagram and tables below to calculate distances for venting runs that terminate horizontally.

Wilderness 25H RS/LS	
V minimum = 3 feet	
Vertical (V)	Max Horizontal (H)
3 ft	21 ft
6 ft	24 ft
9 ft	24 ft
12 ft	24 ft
15 ft	24 ft
18 ft	21 ft
21 ft	18 ft
24 ft	15 ft
27 ft	12 ft
30 ft	12 ft
33 ft	12 ft

Wilderness 51H-60H RS/LS	
V minimum = 3 feet	
Vertical (V)	Max Horizontal (H)
3 ft	12 ft
6 ft	18 ft
9 ft	24 ft
12 ft	21 ft
15 ft	21 ft
18 ft	18 ft
21 ft	15 ft
24 ft	12 ft
27 ft	12 ft
30 ft	12 ft
33 ft	12 ft

HORIZONTAL TERMINATION CAP NOTE: A Sconce Termination Cap can negatively impact flame appearance and is not recommended for use with the fireplace.

Vertical Termination Venting Diagram

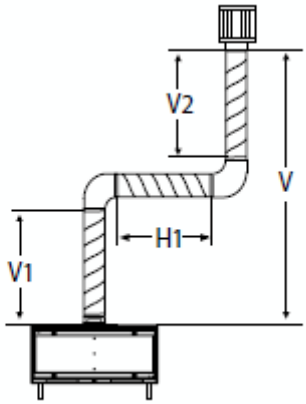

Use this diagram & tables below to calculate distances for venting runs that jog and terminate vertically. V = V1 + V2.

Wilderness 25H RS/LS	
V1 minimum = 3 feet	
Vertical (V)	Max Horizontal (H)
3 ft	15 ft
7 ft	18 ft
10 ft	18 ft
13 ft	18 ft
16 ft	18 ft
19 ft	15 ft
22 ft	12 ft
25 ft	9 ft
28 ft	6 ft
31 ft	6 ft
34 ft	6 ft

Wilderness 51H-60H RS/LS	
V1 minimum = 3 feet	
Vertical (V)	Max Horizontal (H)
3 ft	6 ft
7 ft	15 ft
10 ft	18 ft
13 ft	15 ft
16 ft	15 ft
19 ft	12 ft
22 ft	9 ft
25 ft	6 ft
28 ft	6 ft
31 ft	6 ft
34 ft	6 ft

VERTICAL TERMINATION CAP NOTE: A Low Profile Termination Cap can negatively impact flame appearance and are not recommended for use with the fireplace.

Vertical Termination Venting Diagram

Use this diagram and tables below to calculate distances for vent configurations vent and terminate vertically.

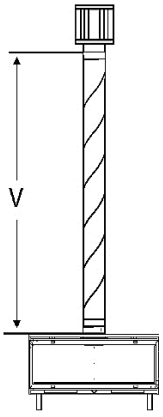

Wilderness 25H-60H RS/LS	
Vertical (V)	**Max Horizontal (H)**
V minimum = 3 ft	
44 ft	N/A

VERTICAL TERMINATION CAP NOTE: A Low Profile Termination Cap can negatively impact flame appearance and are not recommended for use with the fireplace.

Vent Restrictor Sizing Guidelines

The information in this section will help you calculate the correct restrictor selection for your vent configuration. The table below show the restrictor required for a specific rise to run vent configuration. Any venting pathway that does not appear in the tables requires approval from the manufacturer.

The table below applies to both Natural Gas and Propane. This table represents manufacturer's guidelines. Environment, gas type and other factors may affect the best restrictor choice.

How to use the "Recommended Restrictor" table:

1. Find the total vertical rise in your vent configuration along the y-axis.
2. Find the horizontal run in your vent configuration along the x-axis.
3. Follow the rise and run values on the chart until they meet. This is the recommended size restrictor for your vent configuration.

Legend:

X: Vent configuration is not allowed.
0: No restrictor required.
Numbers other than 0: Represents the recommended restrictor (by width).

Restrictor Sizes:

- 20mm (0.79")
- 30mm (1.18")
- 40mm (1.57")
- 50mm (1.97")
- 60mm (2.36")
- 80mm (3.15")

Recommended Restrictor: 25H RS/LS

Total Vertical Vent Rise (in feet)	0'	3'	6'	9'	12'	15'	18'	21'	24'	27'	30'	33'
27'	1.97"	1.57"	1.57"	1.18"	1.18"	0	0	0	0	X	X	X
24'	1.97"	1.57"	1.57"	1.18"	1.18"	1.18"	0	0	0	0	X	X
21'	1.97"	1.97"	1.57"	1.57"	1.18"	1.18"	1.18"	0	0	0	0	X
18'	1.97"	1.97"	1.57"	1.57"	1.18"	1.18"	1.18"	1.18"	0	0	0	0
15'	1.97"	1.97"	1.57"	1.57"	1.18"	1.18"	1.18"	1.18"	1.18"	0	0	0
12'	1.97"	1.97"	1.57"	1.57"	1.57"	1.18"	1.18"	1.18"	1.18"	0	0	0
9	1.97"	1.97"	1.97"	1.57"	1.57"	1.18"	1.18"	1.18"	1.18"	0	0	0
6'	1.97"	1.97"	1.97"	1.57"	1.57"	1.18"	1.18"	1.18"	1.18"	0	0	0
3'	1.97"	1.97"	1.97"	1.57"	1.57"	1.18"	1.18"	1.18"	0	0	X	X

Horizontal Vent Run (in feet)

Recommended Restrictor: 51H-60H RS/LS

Total Vertical Vent Rise (in feet)	0'	3'	6'	9'	12'	15'	18'	21'	24'	27'	30'	33'
27'	1.97"	1.97"	1.97"	1.97"	1.57"	1.18"	1.18"	x	x	x	x	x
24'	1.97"	1.97"	1.97"	1.57"	1.18"	1.18"	1.18"	0	x	x	x	x
21'	1.97"	1.97"	1.97"	1.57"	1.18"	1.18"	1.18"	0	0	x	x	x
18'	1.97"	1.97"	1.97"	1.57"	1.18"	1.18"	1.18"	0	0	0	x	x
15'	1.97"	1.97"	1.57"	1.57"	1.18"	1.18"	1.18"	x	0	0	0	x
12'	1.57"	1.57"	1.57"	1.57"	1.18"	1.18"	1.18"	x	0	0	0	x
9	1.57"	1.57"	1.57"	1.18"	x	x	x	x	0	0	0	x
6'	x	x	x	x	x	x	x	x	0	0	x	x
3'	x	x	x	x	x	0	0	0	0	x	x	x

Horizontal Vent Run (in feet)

VENT CONFIGURATION A
The vent configuration has two vertical 45˚offsets. No additional length for the (H) calculation for the restrictor plate size is needed.

For example:
Total height of duct work = 6 feet (V)
Length between the center of the two 45˚ elbows = (B) = 3 feet
The (H) calculation is (H) = (B) so the restrictor plate size is 1.97”, per the table.

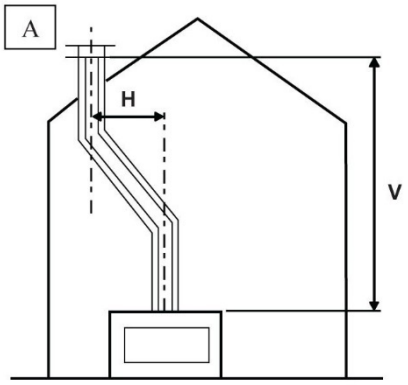

VENT CONFIGURATION B
The vent configuration has two 90˚ offsets. An additional 6 feet must be added to the (H) calculation for the restrictor plate size.

For example:
Total height of duct work = 18 feet (V)
Length between the center of two 90˚ elbows = (B) = 21 feet
The (H) calculation to be used in the restrictor table is (H) = (B) +6 feet, so the (H) length is 27 feet.
Per the table, the restrictor plate is 0. No restrictor is required.

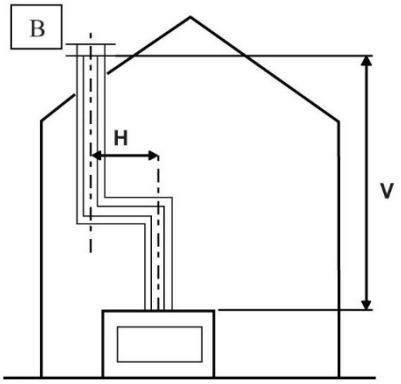

VENT CONFIGURATION C
The vent configuration has one 90˚ offset. The first 90˚ offset is not taken into calculation of the (H) length for the restrictor plate size.

For example:
Total height of duct work = 15 feet (V)
Length between the center of the 90˚ elbow and wall termination cap = (B) = 11 feet
The (H) calculation is (H) = (B) = 11. Therefore, the restrictor plate size is 1.18”, per the table.

The value of *11* does not appear on the **x** scale of the table. The choices are then *9* and *12*. Always choose the next **higher** value, which is also the smaller restrictor if there is a difference between the values provided.

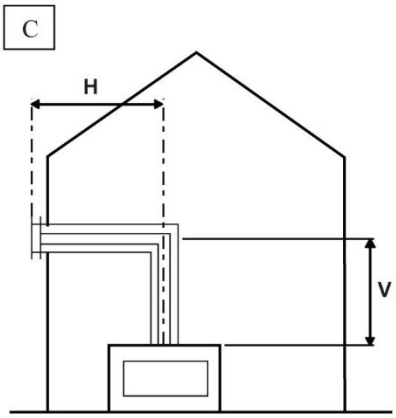

VENT CONFIGURATION D
The vent configuration is straight vertical (no 45˚ or 90˚ offsets).

For example:
Total height of duct work = 24 feet (V)
The (H) calculation is = 0. Therefore, the restrictor plate size is 1.97”.

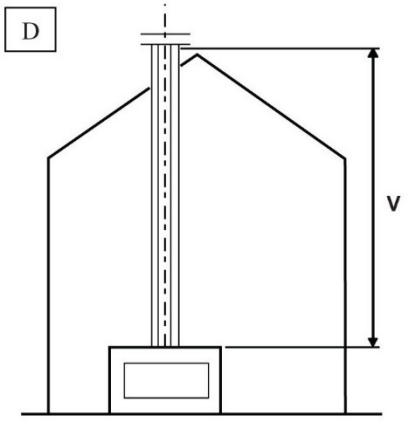

Vent Termination

Horizontal Termination Clearance Diagram

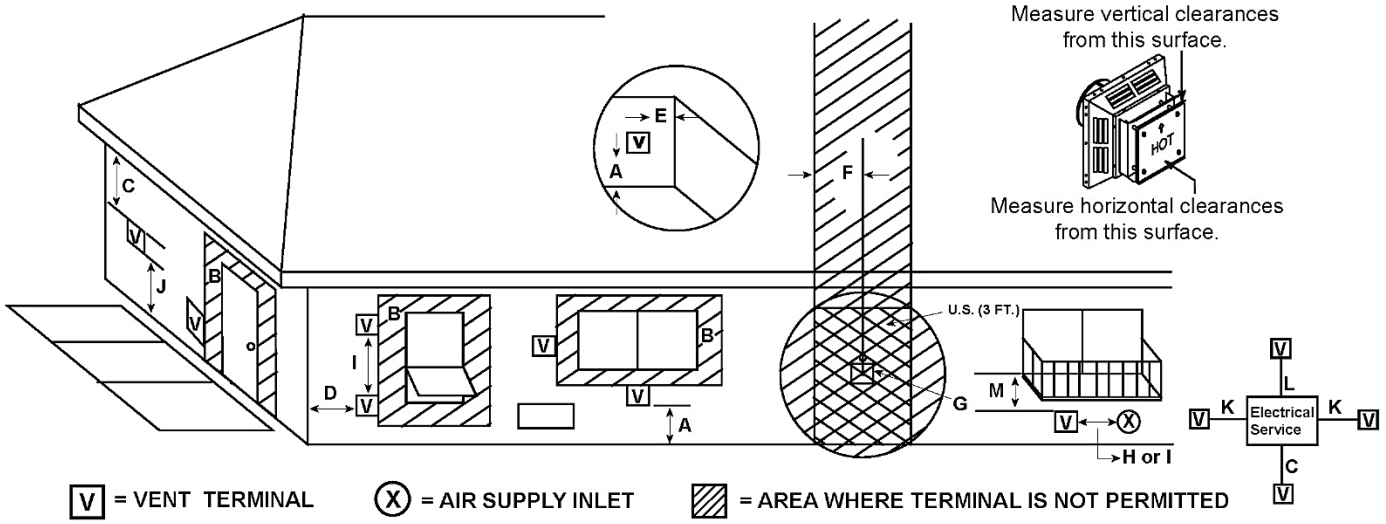

Location	Country	Minimum Clearance	Description
A	US & Canada	12 inches	Clearance above grade, veranda, porch, deck, or balcony. NOTE: On private property where termination is less than 7 feet above a sidewalk, driveway, deck, porch, veranda, or balcony, use of a listed cap shield is suggested.
B	US	≤ 50,000 BTU: 9 inches > 50,000 BTU: 12 inches	Clearance to an operable window or door. NOTE: Zero clearance to an inoperable window or door.
	Canada	12 inches	
C	US & Canada	24 inches	Vertical clearance to a **ventilated** soffit located above the vent termination.
		18 inches	Vertical clearance to an **unventilated** soffit located above the vent termination.
		42 inches	Vertical clearance to vinyl clad soffits and below electrical service.
D	US & Canada	9 inches	Clearance to an outside corner.
E	US & Canada	6 inches	Clearance to an inside corner.
F	US	N/A	Not to be installed above a gas meter/regulator assembly within 3 feet (90 cm) horizontally from the center-line of the regulator.
	Canada	3 feet	
G	US & Canada	3 feet	Clearance to gas service regulator vent outlet.
H	US	9 inches	Clearance to a non-mechanical air supply inlet to the building or the combustion air inlet to any other appliance. NOTE: Termination in a covered alcove space (spaces open only on one side and with an overhang) are permitted with the dimensions specified for vinyl or non-vinyl siding and soffits. 1. There must be 3 feet minimum between termination caps. 2. All mechanical air intakes within 10 feet of a termination cap must be a minimum of 3 feet below the termination cap. 3. All gravity air intakes within 3 feet of a termination cap must be a minimum of 1 foot below the termination cap.
	Canada	12 inches	
I	US	3 feet	Clearance to a mechanical (powered) air supply inlet. NOTE: Termination in a covered alcove space (spaces open only on one side and with an overhang) are permitted with the dimensions specified for vinyl or non-vinyl siding and soffits. 1. There must be 3 feet minimum between termination caps. 2. All mechanical air intakes within 10 feet of a termination cap must be a minimum of 3 feet below the termination cap. 3. All gravity air intakes within 3 feet of a termination cap must be a minimum of 1 foot below the termination cap.
	Canada	6 feet	
J*	US & Canada	7 feet	Clearance above paved sidewalk or a paved driveway located on **public** property. NOTE: On private property where termination is less than 7 feet above a sidewalk, driveway, deck, porch, veranda, or balcony, use of a listed cap shield is suggested. *a vent shall not terminate directly above a sidewalk or paved driveway which is located between two single family dwellings and serves both dwellings.
K	US & Canada	6 inches	Clearance from sides of electrical service. NOTE: Location of the vent termination must not interfere with access to the electrical service.
L	US & Canada	12 inches	Clearance above electrical service. NOTE: Location of the vent termination must not interfere with access to the electrical service.

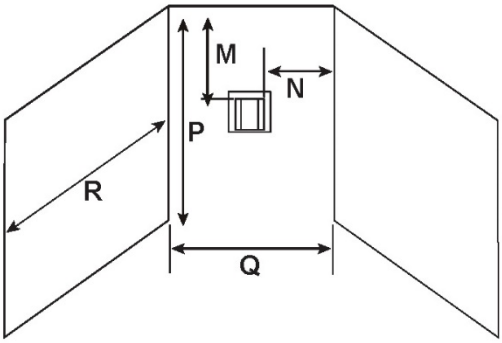

Covered Alcove: spaces open only on one side and with an overhang

Horizontal Termination Clearances Continued: Covered Alcove Application				
	Location	Country	Minimum Clearance	Description
COVERED ALCOVE APPLICATION	M	US & Canada	16 inches	Clearance under **non-vinyl** veranda, porch, deck, balcony, or overhang. NOTE: Termination in a covered alcove space is permitted with the dimensions specified. 1. There must be 3 feet minimum between termination caps. 2. All mechanical air intakes within 10 feet of a termination cap must be a minimum of 3 feet below the termination cap. 3. All gravity air intakes within 3 feet of a termination cap must be a minimum of 1 foot below the termination cap.
	N	US & Canada	6 inches	Non-vinyl sidewalls.
			12 inches	Vinyl sidewalls.
	P	US & Canada	8 feet	Alcove height.
	Q	US & Canada	See table below.	Alcove width (dependent on number of caps in the space).
	R	US & Canada	See table below.	Alcove depth (dependent on number of caps in the space).

# Vent Caps	$Q_{MINIMUM}$	$R_{MAXIMUM}$
1 vent cap	3 feet	2 x Q_{ACTUAL}
2 vent caps	6 feet	1 x Q_{ACTUAL}
3 vent caps	9 feet	$^{2}/_{3}$ x Q_{ACTUAL}
4 vent caps	12 feet	$^{1}/_{2}$ x Q_{ACTUAL}
	Q_{MIN} = # vent caps x 3	**R_{MAX} = ($^{2}/_{\#\ vent\ caps}$) x Q_{ACTUAL}**

HORIZONTAL TERMINATION CAP CLERANCES - NOTES:

- If exterior walls are finished with vinyl siding, it is *required* that a vinyl protector kit be installed.
- Vent system termination is not permitted in screened porches.
- Vent system termination is permitted in porch areas with two or more sides open. You must follow all side walls, overhang and ground clearances as stated.
- Termination caps may be hot. Consider their proximity to doors or other traffic areas.

TERMINATION CAP NOTE: A Sconce Termination Cap can negatively impact flame appearance and is not recommended for use with the fireplace.

Vertical Termination Clearance Diagram

Minimum Height From Roof To Lowest Discharge Opening

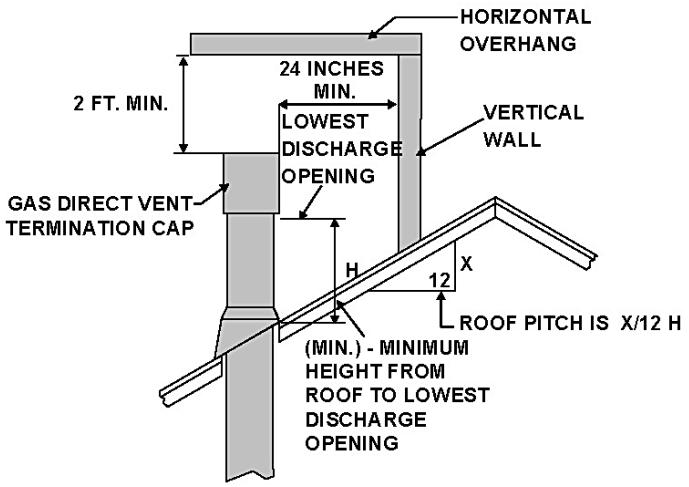

Roof Pitch	H (Min.) Ft.
Flat to 6/12	1.0*
Over 6/12 to 7/12	1.25*
Over 7/12 to 8/12	1.5*
Over 8/12 to 9/12	2.0*
Over 9/12 to 10/12	2.5*
Over 10/12 to 11/12	3.25
Over 11/12 to 12/12	4.0
Over 12/12 to 14/12	5.0
Over 14/12 to 16/12	6.0
Over 16/12 to 18/12	7.0
Over 18/12 to 20/12	7.5
Over 20/12 to 21/12	8.0

*H min. may vary depending on regional snowfall. Refer to local codes.

Staggered Termination Caps

A	B
6 in. (minimum) up to 24 in.	18 in. minimum
24 in. and over	0 in. minimum

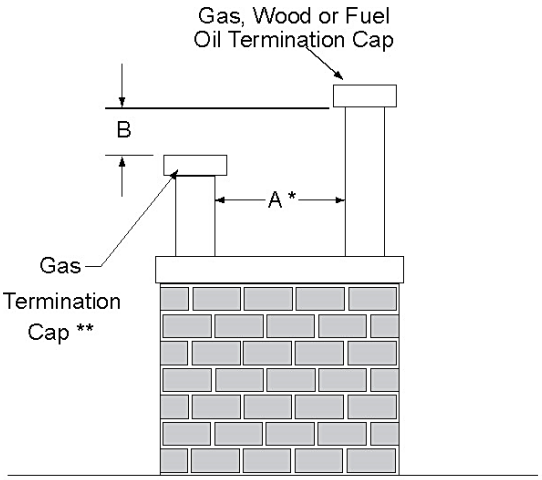

* If using decorative cap cover(s), this distance may need to be increased. Refer to the installation instructions supplied with the decorative cap cover.

** In a staggered installation with both gas and wood or fuel oil terminations, the wood or fuel oil termination cap must be higher than the gas termination cap.

Notes:

1. Maintain a minimum of 2 feet clearance between edge of vertical termination and perpendicular wall.
2. If terminating near window, keep minimum of 2 feet clearance between window and vent termination.
3. All mechanical air intakes (such as an Enervex power vent) within 10 feet of a termination cap must be a minimum of 3 feet below the termination cap.
4. All gravity air intakes within 3 feet of a termination cap must be a minimum of 1 foot below the termination cap.

NOTE: This chart does <u>not</u> apply to a chimney shroud application. See the "Chimney Shroud" section on the next page for more information.

TERMINATION CAP NOTE: A Low Profile Termination Cap can negatively impact flame appearance and is not recommended for use with the fireplace.

Chimney Shroud

Top Open

Keep a minimum **6-inch** clearance around the diameter of the cap's side edge and extending above and below the cap.

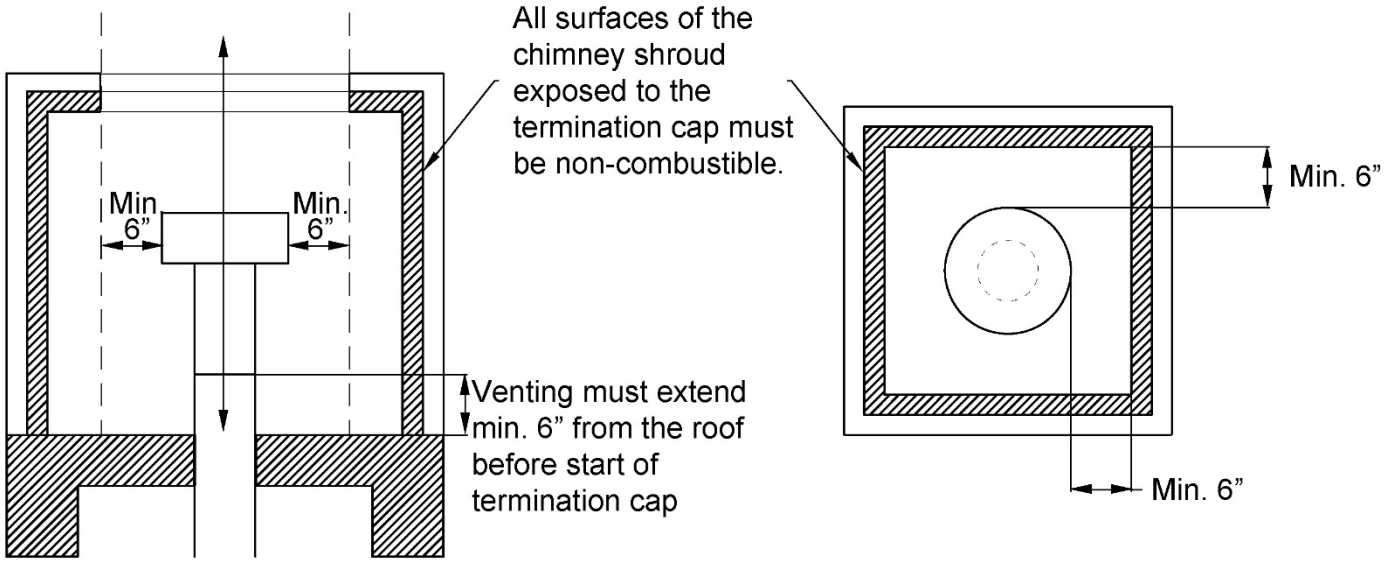

Sides Open

Keep a minimum **6-inch** clearance around the diameter of the cap's side edge, and a minimum **10-inch** clearance above the top of the cap. For openings in the shroud, make sure to allow for enough air flow space to release the exhaust gases and allow the vent to operate properly.

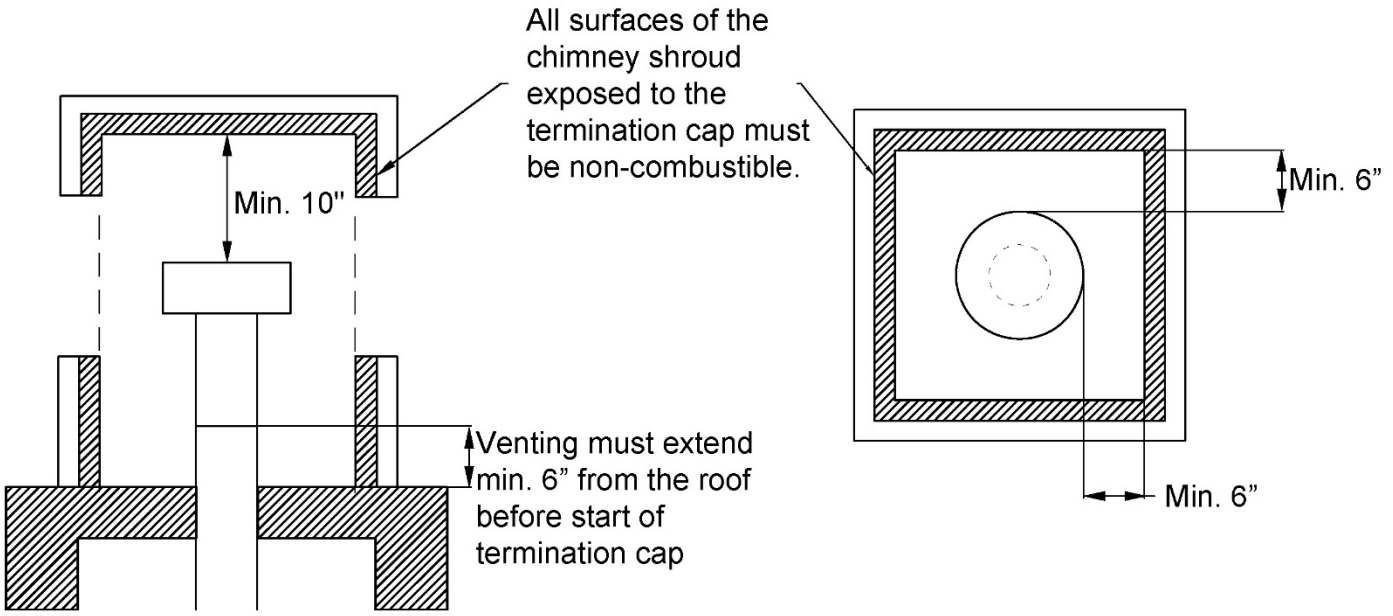

Vent Maintenance

Regular inspection of the vent system by a qualified service technician is recommended every six months. The following maintenance routing is recommended:

- Inspect for excessive condensation, e.g., water droplets forming in the inner lining, and subsequently dripping from the joints. This can cause corrosion in the system.
- Check for corrosion in areas exposed to the elements. Components with rust spots or holes must be immediately replaced.
- Ensure that there is no foreign material in the vents. Survey by removing the cap and shining a light down the vent.
- If possible, check all vent joints to make sure nothing has been disturbed or loosened.

Co-Axial to Co-Linear Conversion

This section explains how the fireplace can be inserted into an existing solid fuel burning fireplace chimney by converting the co-axial venting to co-linear.

IMPORTANT NOTES:

- The fireplace must be vented vertically to the outside and must use one of the approved co-linear flexible ducting systems or a co-axial flexible ducting system.
- Air intake (as applicable) and heat release is still required per installation guidelines (even when venting through a chimney). All other building requirements still apply.
- Restrictor use is not required when using co-linear venting.

WARNINGS:

- If the vent system of this appliance is disconnected for any reason, the vent and air intake systems must be properly reassembled and resealed before this appliance is put into use.
- Proper installation of the vent system, as required in this manual, is vital to the performance of this appliance. Oversights or failure to conform to all installation requirements will void the applicable warranty.
- This appliance must be properly connected to a venting system in accordance with the Ortal's installation instructions. Operation of this appliance when not connected to a properly installed and maintained venting system can result in carbon monoxide (CO) poisoning and possibly death.
- Co-linear flexible aluminum venting must be professionally inspected periodically for corrosion and damage and replaced when necessary. If the installation does not allow for future inspection or replacement of the flexible aluminum venting, then stainless steel vent liners should be used.
- Co-linear portion of vent system may only be installed within a solid-fuel burning fireplace and chimney.
- The appliance must not be connected to a chimney flue serving a separate solid-fuel burning appliance.

The plan to install a gas fireplace inside an existing solid fuel burning fireplace chimney must include inspection and cleaning of the fireplace cavity and the entire chimney system. The chimney top, especially masonry chimneys and wood framed chimney tops must be inspected, and the top surface must be repaired or replaced, if necessary. Unlined chimney flues are the most vulnerable to mortar corrosion and damage. These flues must be inspected, and repair must be done before dropping the flex vent liner for this Insert.

If you encounter a badly deteriorated or completely damaged firebox, do not proceed. These damaged structures must be reviewed by structural Engineers and Local Building Code officials must approve the repair work prior to this Insert being installed in such a damaged cavity.

Series	Vent Size	Adapter (BDM or equivalent*)	Split Pipe Size	Termination Cap (BDM or equivalent*)
Wilderness 51H	5"x8"	5"x8" to 4"x3" (DVR8-A34)	4"x3"	4"x3" (PV3-VCS34B)

***BDM component part numbers are offered as a suggestion. Components from the following companies may also be used: Duravent, Olympia, ICC, and Selkirk.**

Example of Co-axial to Co-linear Appliance Adapters (BDM)	Example of Co-linear Terminal (BDM)
	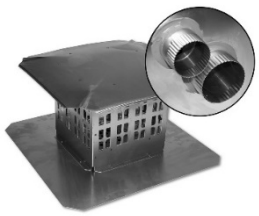

Vent Configuration

- **Minimum Vertical Rise:** 10 feet (see diagram below)
- **Maximum Vertical Rise:** 40 feet (see diagram below)
- **Offsets:** Two 45˚ offsets may be used directly on the fireplace with up to a 6-foot section between them. The minimum vertical rise starts above them (see diagram below). No other offsets are permitted in the vent configuration. Offsets are not required to have.

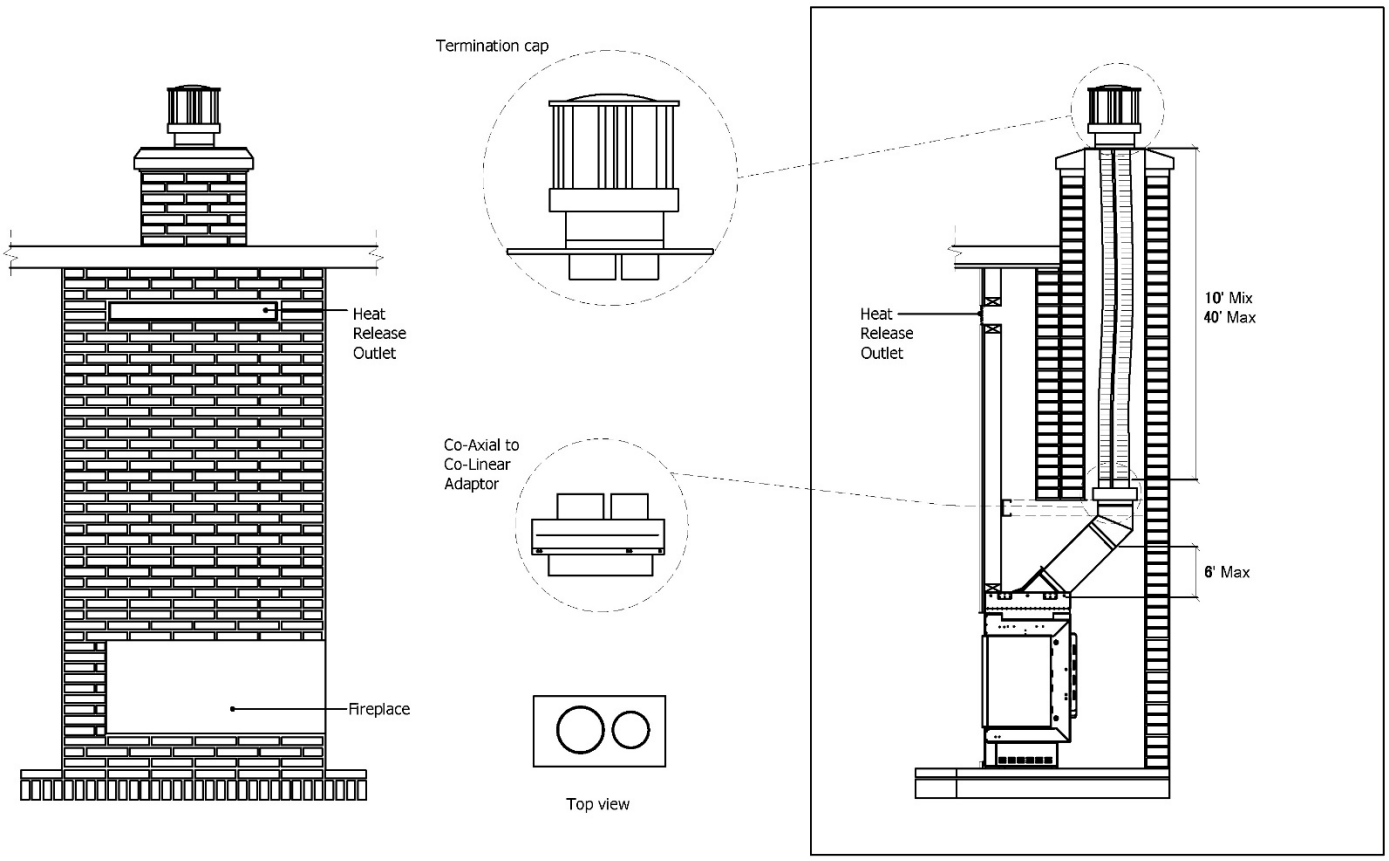

Gas

The fireplaces are approved for use with natural gas (NG) or propane (LP) only. No other fuel types are permitted.

Gas Pressures

Fireplace Series	Burner	Gas Type	Inlet Pressure		Manifold Pressure	Heat Input (BTU/hr)		Orifice Size* (by log)
			Min	Max		Min	Max	
25H	Dark Wood Firelog Set OR Chopped Wood Firelog Set	Natural Gas	7.0	11.0	4.7	12,613	29,861	220-160-220 180
		Propane	11.0	13.0	4.7	18,020	24,130	90-60-90 80
51H 60H	Driftwood Firelog Set	Natural Gas	7.0	11.0	4.7	15,686	32,163	320-160-320 380
		Propane	11.0	13.0	4.7	21,400	31,400	90-60-90 180

***Orifice Size, Top Row (left to right): Left log, center log, right log. Bottom Row: Back log.**

NOTE: It can take up to 20 minutes for the flames to turn yellow.

Routing the Gas Line

Correctly size and route the gas supply line from the supply regulator to the area where the access panel is located (or to the burner area if no access panel is available), as per the requirements outlined in the latest edition of the National Fuel Gas Code, NFPA 54 (USA) or CAN/CSA-B1491 (Canada).

The gas and electrical components are attached to the pilot on a flexible gas line and can be kept directly under the fireplace or moved to the left (for RS) or right (for LS) side or back of the fireplace within 36 inches of the pilot (located at the center front of the burner). Gas line should be routed to the access panel area (see “Access Panel” section for details). If no access panel is planned, gas line should be routed to the most accessible area within the 36” radius (as shown in diagram below).

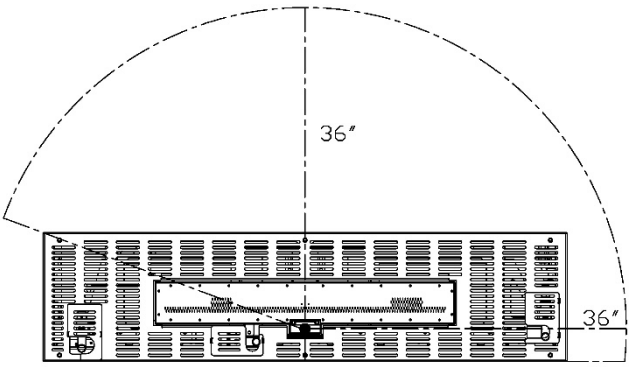

Gas/Electrical Component Range for LS Model

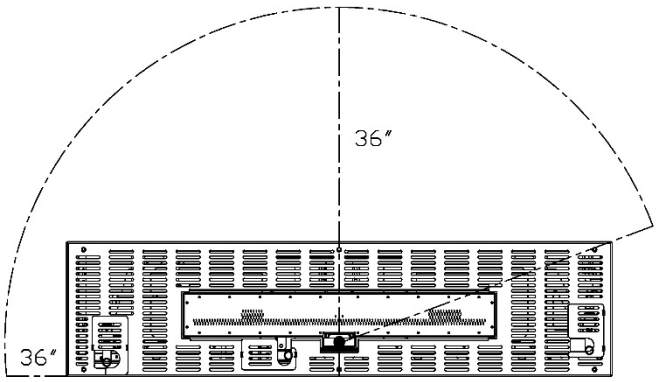

Gas/Electrical Component Range for RS Model

A gas shut-off valve and a 12” gas flex connector are provided with every fireplace. The location of the gas shut-off valve is dependent on local codes and requirements. Check with your authority having jurisdiction for more information.

WARNING –The main gas valve must be installed to allow complete disconnection of the fireplace from the gas supply piping system for servicing purposes.

Gas Conversion

Gas conversion (NG to LP or LP to NG) can be done in the field. Gas conversion must be performed only by technicians who have specific authorization by Ortal to change these components. The conversion kit must be supplied by Ortal. Using parts from other manufacturers or having an unauthorized party performing the conversion will void your fireplace’s warranty. Conversion instructions are supplied with the conversion kit.

High Altitude Requirements

For elevations above 2,000 feet, fireplace shall be re-rated 4% for each 1,000 feet above sea level.

Gas and Electrical Components

Assemblies and components are listed and described in the tables following the figure.

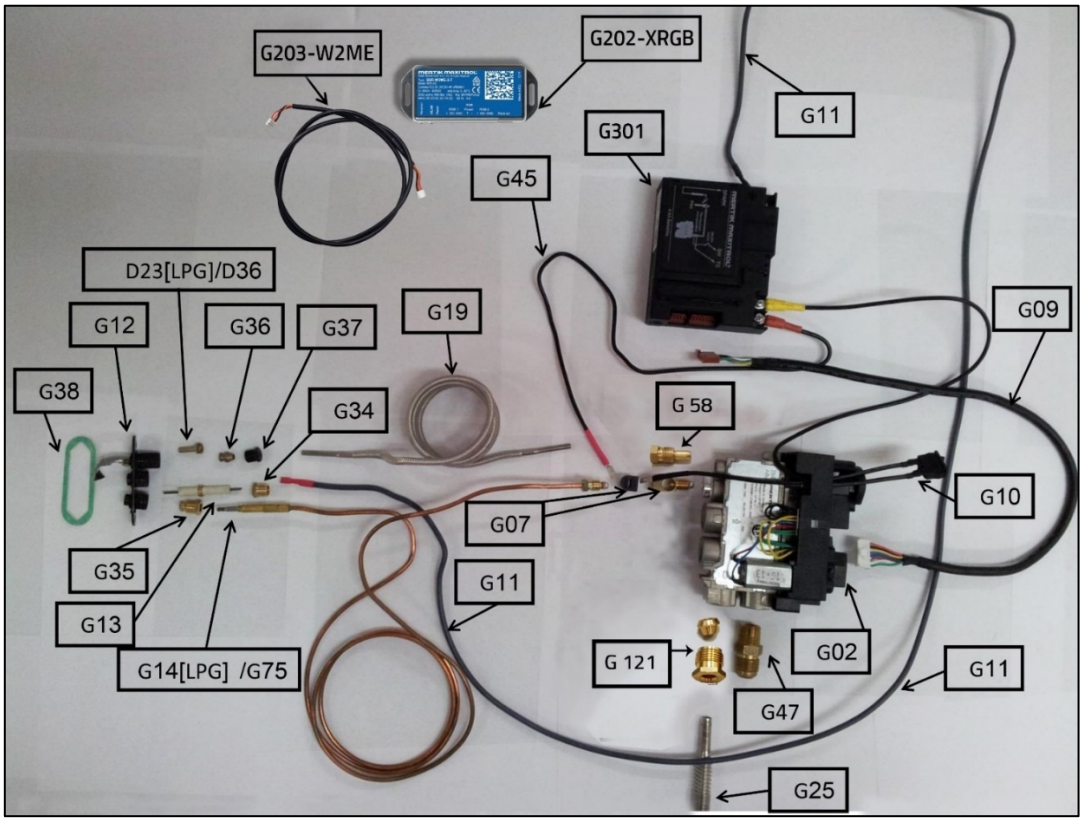

Part Number	Description
D23	Orifice LPG
D36	Orifice NG
G02	Mertik Gas Valve
G301	Symax Receiver
G202-XRGB	Symax Wi-Fi Box
G203-W2ME	Symax Wi-Fi Box Cable
G07	Thermocouple Block
G09	Wire Harness for Receiver and Gas Valve
G10	Switch w. cables 180/500 mm
G11	Spark Wire
G12	Pilot Base
G75 G14	Thermocouple NG Thermocouple LPG

Part Number	Description
G13	Electrode Target Type
G121	Main Burner Gas Fitting
G25	Burner Gas Tube
G19	Pilot Gas Tube
G34	Spark Plug Connector
G35	Thermocouple Connector
G36	OLIVE D.4 Pilot gas tube compression ring valve
G37	Pilot gas tube fitting burner side
G38	Pilot Assembly Gasket
G45	Red Cable
G58	Connection fitting 4mm One-piece
G47	Fitting for main line inlet to gas valve GV60

The manufacturer of Ortal's gas and electrical components is Mertik Maxitrol. For information on these components, please visit the manufacturer's website: www.mertikmaxitrol.com

Firelogs

For log placement instructions, please see separate model-specific Log Placement Guide for details. This will be included with the Wilderness fireplace log set. Log placement of the Firelog Set is crucial for optimal fireplace operation and safety purposes. Logs must be arranged as depicted in the applicable Log Placement Guide. No other arrangement is permitted. No other interior design media options are permitted for the Wilderness Corner series fireplaces.

NOTES:

- Log sets for NG and LP have different SKUs. Please consult the price list to ensure you have the correct SKU.
- LP logs do not contain nickel strands inside the logs. NG logs do contain nickel strands.

WARNING: Only media provided by Ortal is permitted for use in the fireplace.

WARNINGS: INSTALLING AND HANDLING MEDIA

- Log media is fragile, handle with care.
- **DO NOT** install the interior design media until fireplace installation is complete, the gas line is connected and tested for leaks, and initial burner operation has been inspected and approved.
- Media materials get very hot and will remain hot up to one hour after gas supply is turned off. Handle media only when materials are cool.
- If media is not installed according to the installation instructions, flame impingement and improper combustion may occur and result in soot and/or excessive production of carbon monoxide (CO). Carbon monoxide is a toxic, colorless, and odorless gas.

WARNING: The fireplace is not designed to burn real wood. Any attempt to do so could cause irreparable damage to the fireplace and may result in property damage, personal injury and/or loss of life.

Electrical

WARNING: Disconnect the power supply before servicing any electrical components.

Electrical Requirements

A duplex receptacle with two outlets (not included) must be installed in the location where the gas and electrical components will be placed, which must be to the side or back of the fireplace within **36 inches** of the pilot (see diagram in "Routing the Gas Line" section). Electrical work should be performed by a qualified licensed electrician, per local code.

Outlet Type	Power Requirements
1 Duplex Receptacle (2 outlets)	120V, 15 amp, 60Hz

NOTE: Any device that functions using the same radio frequency as the handset will be affected when remote-controlled handset is in use.

Pairing the Remote and Receiver

To set up the remote-control device to operate the fireplace, follow the following guidelines to pair the remote and receiver unit on the same radio frequency.

1. Press and hold the receiver's reset button until you hear two beeps. The first beep is short, and the second beep is long. After the second beep, release the reset button.

2. Within the subsequent 20 seconds, press the following button depending on the mode of operation:
   - **10-Button Handset**: Press the ▼ button. "CONN" and a running number from 1 to 8 will appear on the handset display confirming that the synchronization and data exchange are in process.
   - **Wall Switch**: Use the 10-button handset to synch with the receiver. Once the remote and receiver are paired, the wall switch will function normally.
   - **myFire App**: Use the 10-button handset to synch with the receiver. Once the remote and receiver are paired, the App will function normally.
3. You will hear two short beeps confirming the connection.

NOTES:

- If you hear one long beep, this indicates the connection has failed or the wiring is incorrect.
- The connection between remote and receiver only needs to be made once and is not required after changing the batteries in the remote.

Wiring Diagrams

The following diagrams show the electrical wiring required for different feature combinations.

Wiring Diagram: Screen Fireplace with Interior Lighting

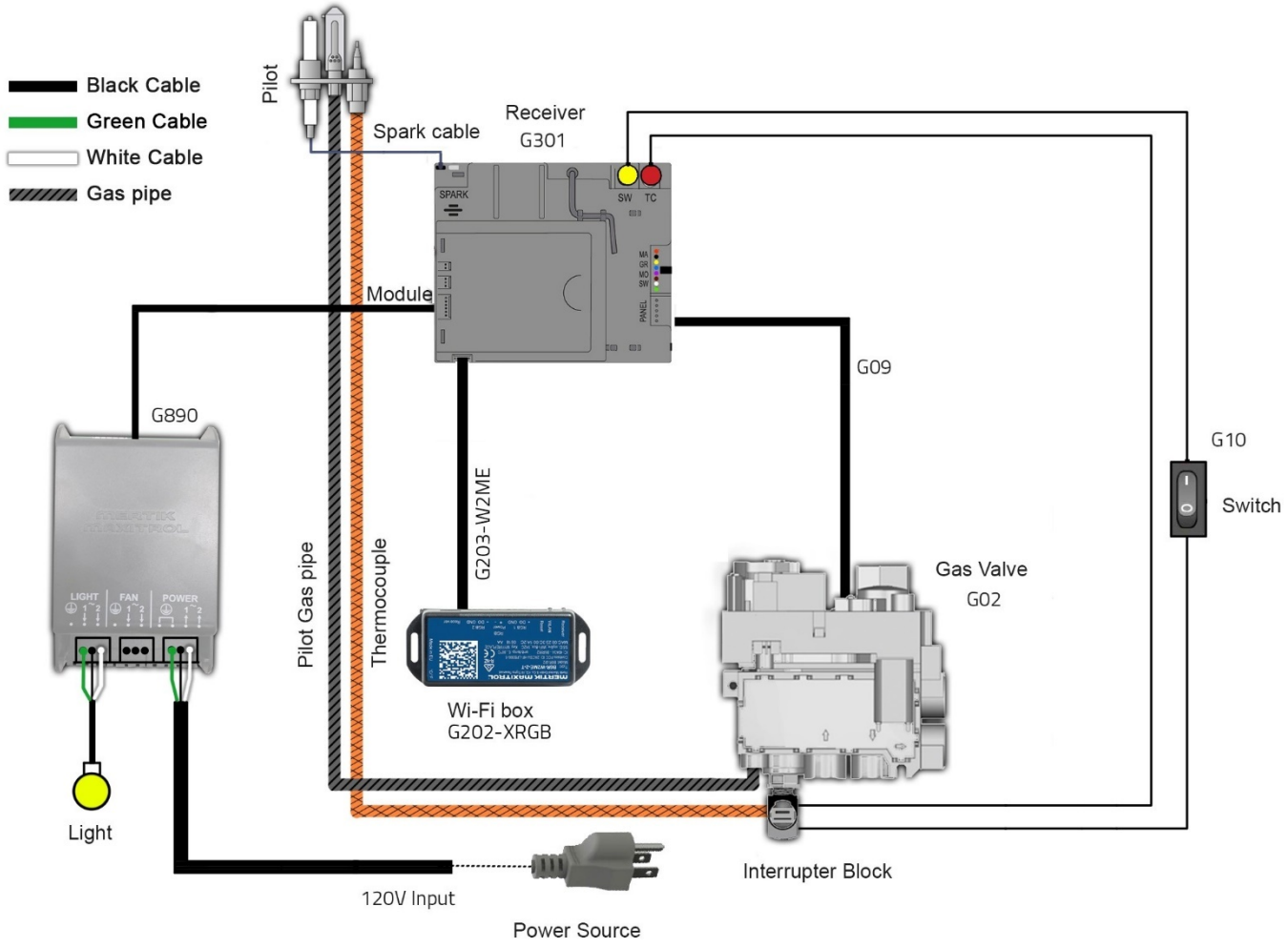

Wiring Diagram: Screen Fireplace with Interior Lighting and Ortal Power Vent

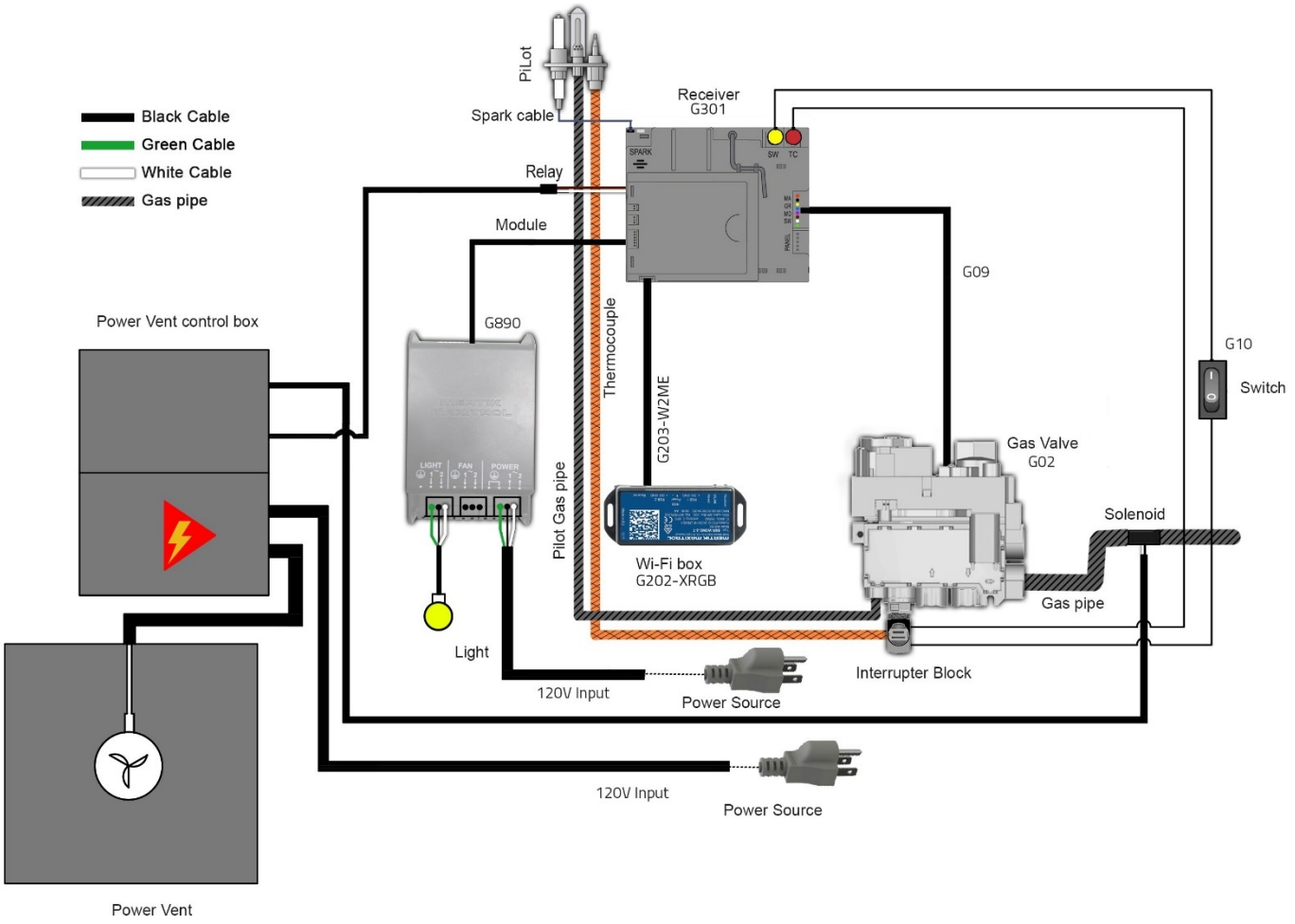

Wiring Diagram: Double Glass Fireplace with Interior Lighting

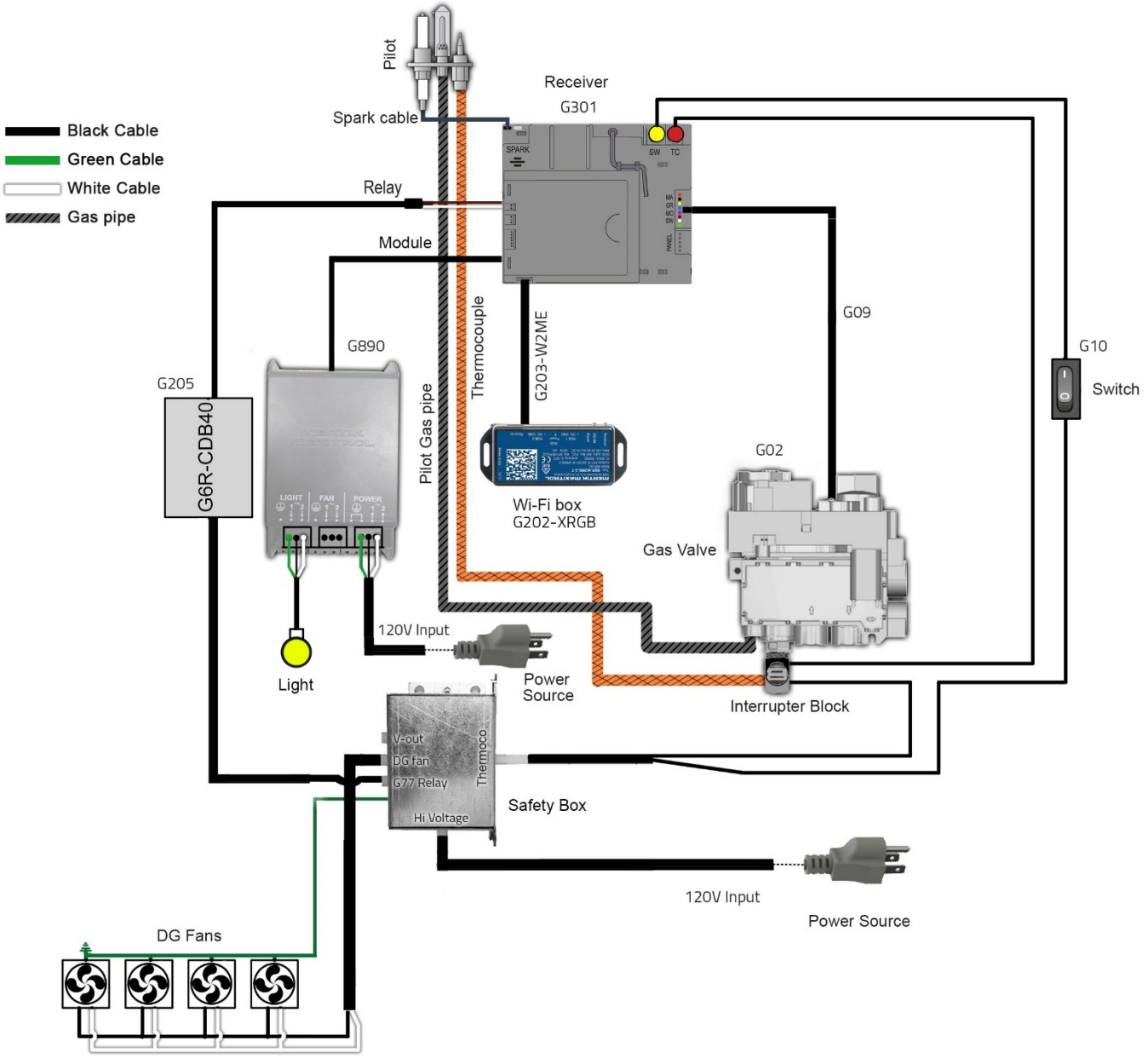

Wiring Diagram: Double Glass Fireplace with Interior Lighting and Ortal Power Vent

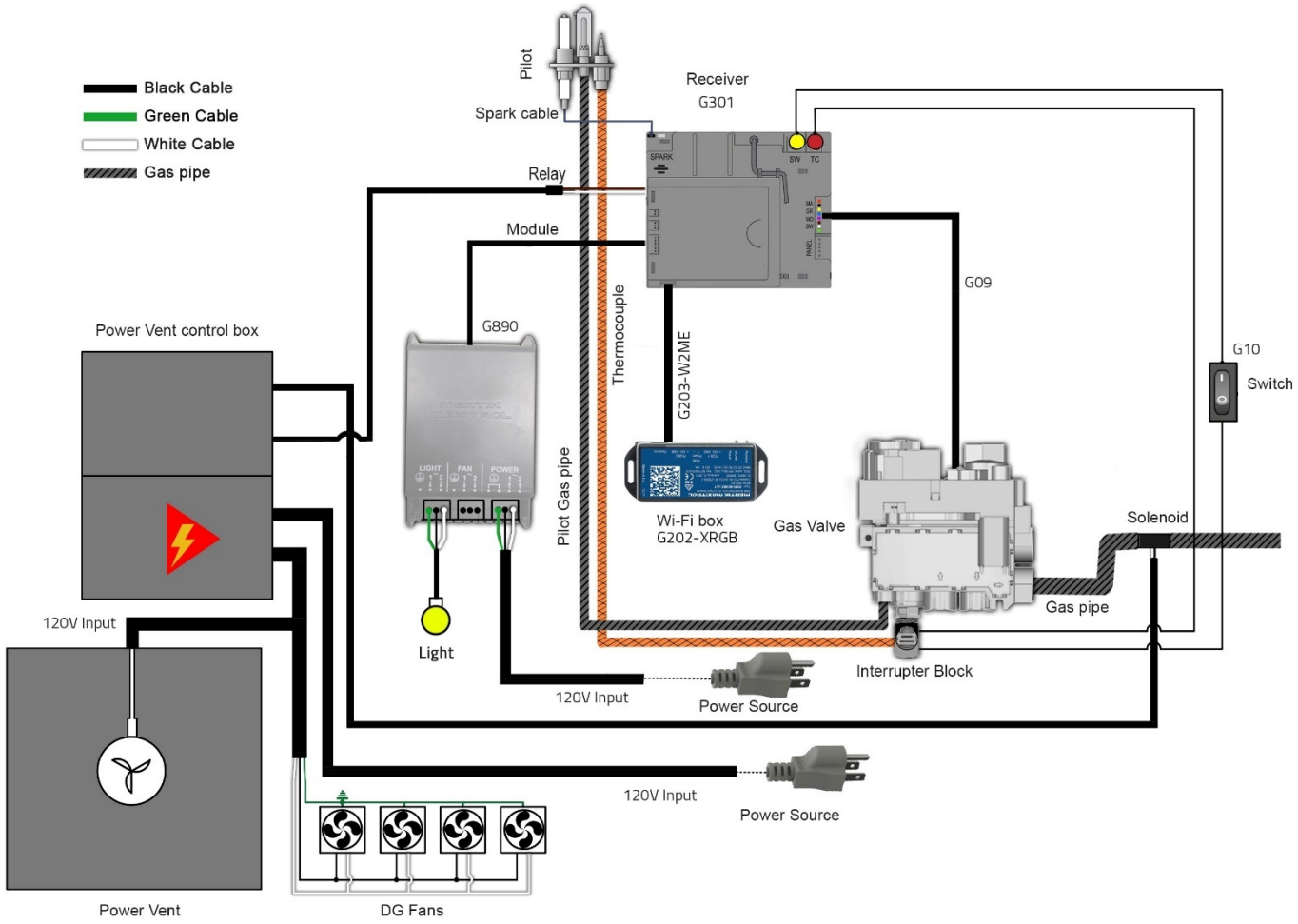

Carbon Monoxide Detector Wiring Diagrams

CO Kit Wiring Diagram: Screen Fireplace

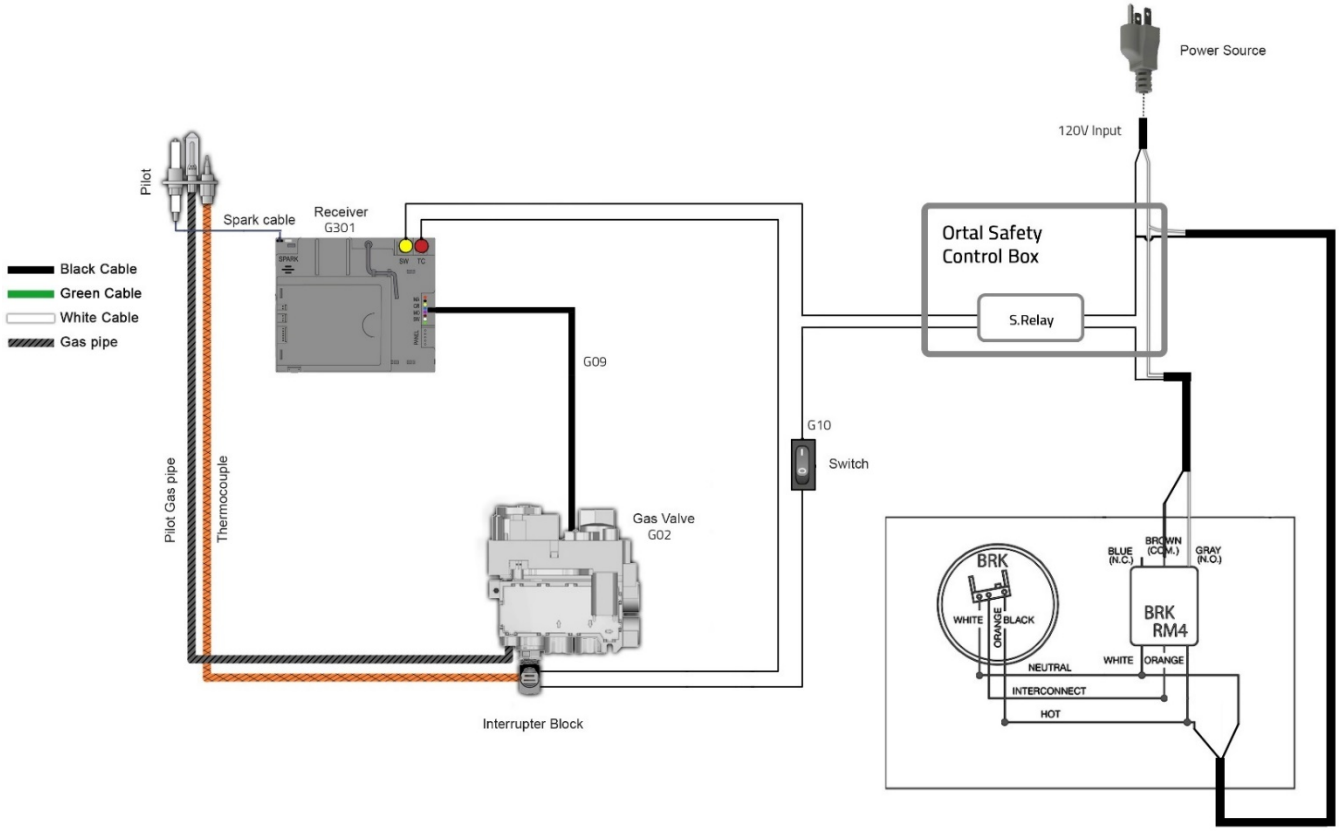

CO Kit Wiring Diagram: Double Glass Fireplace

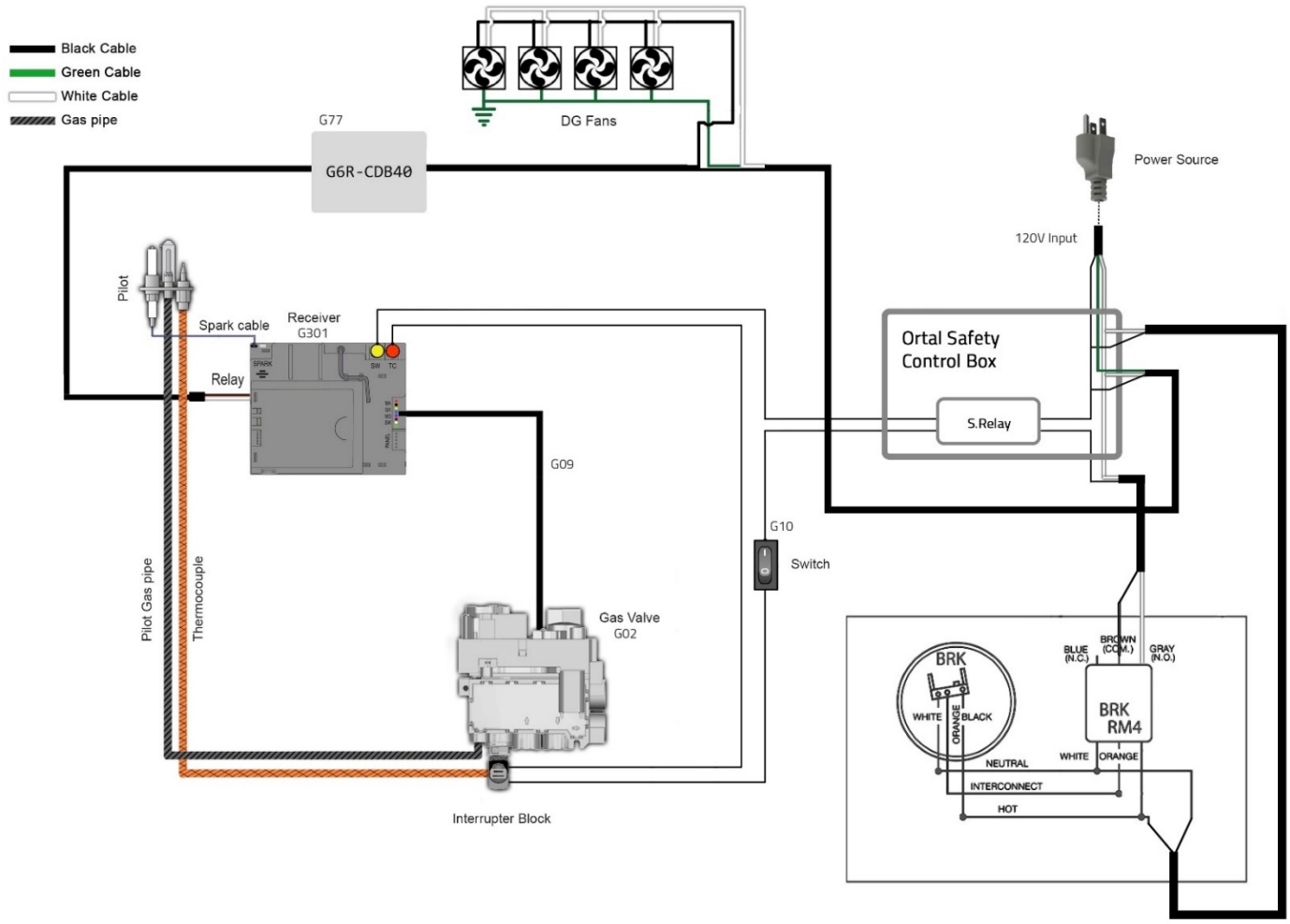

Home Automation Wiring Diagram

Use the following wiring diagram to connect fireplace control a hardwired home automation system.

Contacts Options/Operation
Ignition: Close contacts 0 (orange) and 2 (brown) simultaneously for 1 second. Fireplace automatically goes to high after ignition. **Up Flame:** Close contacts 0 (orange) and 1 (red) simultaneously. The contact needs to be closed for 12 seconds to turn the motor from end-stop to end-stop. **Down Flame:** Close contacts 0 (orange) and 3 (black) simultaneously. The contact needs to be closed for 12 seconds to turn the motor from end-stop to end-stop. **Off:** Close contacts 0 (orange) and 3 (black) simultaneously for 1 second.

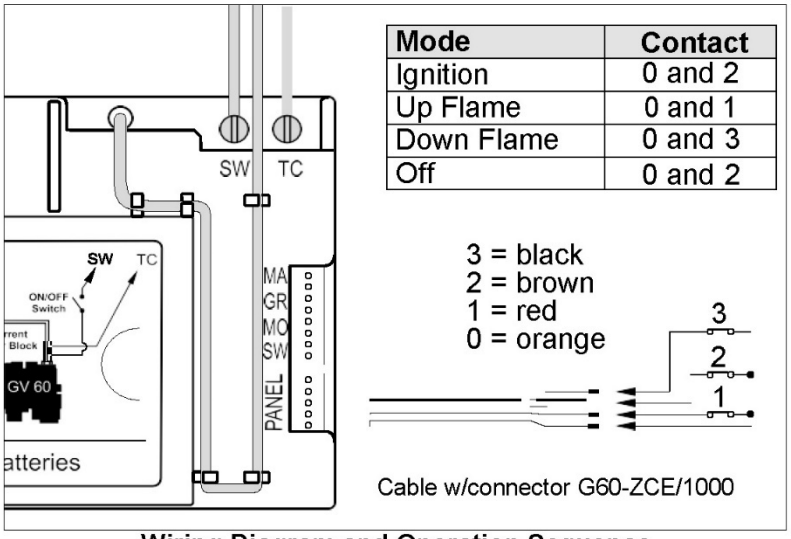

Mode	Contact
Ignition	0 and 2
Up Flame	0 and 1
Down Flame	0 and 3
Off	0 and 2

Wiring Diagram and Operation Sequence

Mode of Operation: The external source provides ON and OFF operation only. The Timer/Thermostat handset provides all other functions.

NOTICE: The Timer/Thermostat handset in Thermostatic Model controls the room temperature even if the fire is turned on by the external source. If the handset is in Manual Mode, the fire will go to High Fire in the next cycle of external operation.

NOTE: This wiring diagram is for hardwired home automation systems only and will not connect the fireplace to a wireless system.

Operation

WARNING – Read these instructions carefully before lighting the fireplace.

IMPORTANT NOTES:

- Wiring of valve and receiver must be completed before starting ignition. Failure to do so could damage the electronics.
- If operating the fireplace without an AC adapter, battery replacement is recommended at the beginning of each heating season.
- Fireplaces with double glass, power vent, and/or interior lighting features must operate using the AC Adapter and therefore will not operate during a power failure.
- Only the Mertik Maxitrol AC Adapter (or one pre-approved by Mertik Maxitrol) is permitted for use with the fireplace. Use of other adapter brands can render the system inoperable. The handsets, receivers, wall switches are not interchangeable with other electronics.
- Batteries must be kept within their recommended temperature limits (32°F to 131°F).

10-Button Remote Control Handset

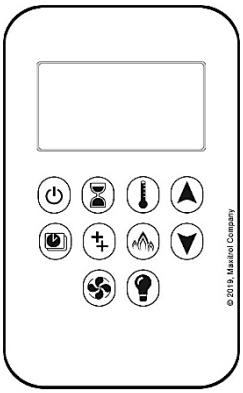

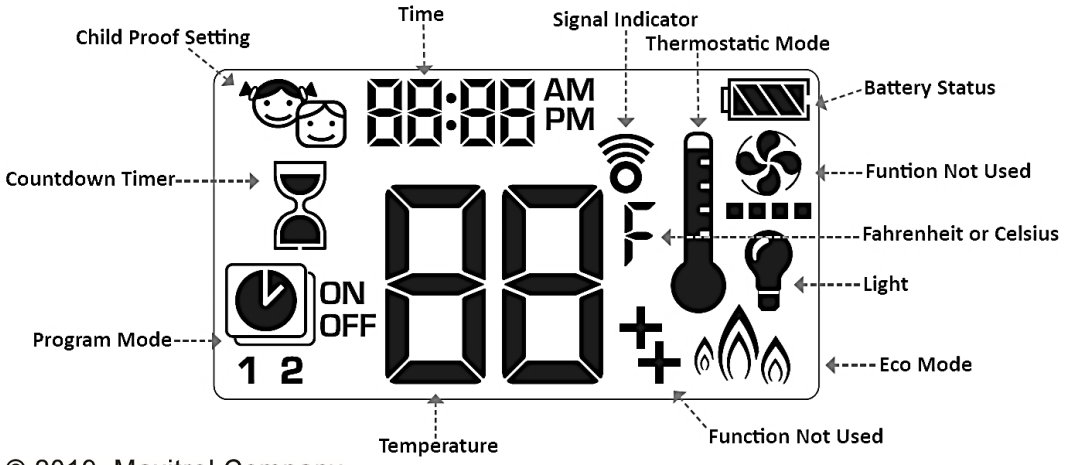

© 2019, Maxitrol Company

Control Option	Radio Frequency	Power Supply	
10-Button Handset	918.0 MHz (U.S. & Canada)	2 x 1.5V AAA batteries (quality alkaline recommended)	Replace batteries after 2 years or when low battery indicator appears on handset display
IMPORTANT: For safety/communication purposes, 10-button handset must be located within 26 feet of the receiver.			

NOTE: Any device that functions using the same radio frequency as the handset will be affected when handset is in use.

Operating Instructions

Instructions for operating the 10-Button Handset are shown below. For more in-depth instructions, please refer to the “Homeowner’s Fireplace Operation Manual” or “Remote Operation Instructions”.

NOTE: Some options on the remote may not be available for all fireplaces.

Turning the Fireplace On

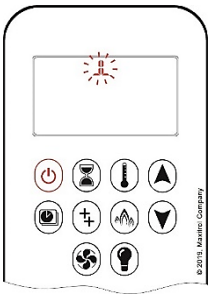

1. Press the ⏻ button until you hear continuous beeping, and a blinking series of lines confirms the start sequence has begun; release buttons.
2. Main gas flows once pilot ignition is confirmed.
3. The system automatically goes into Manual Mode after main burner ignition.

NOTE: When pilot ignition is confirmed, motor turns automatically to maximum flame height.

NOTE: If the Timer function has been set and the fireplace is manually turned on, the Timer function will need to be reset.

Turning the Fireplace Off

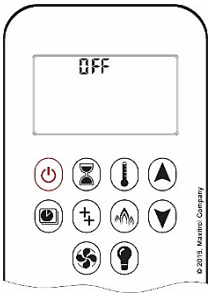

1. Press the ⏻ button to turn the fireplace off.

NOTE: The fireplace may be turned on again after the OFF icon stops flashing.

Flame Height Adjustment

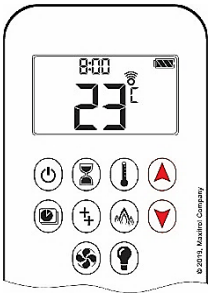

1. To increase flame height, press and hold the ▲ button to desired flame height.
2. To decrease flame height, or to set fireplace to pilot flame only, press and hold the ▼ button.

Puck Handset

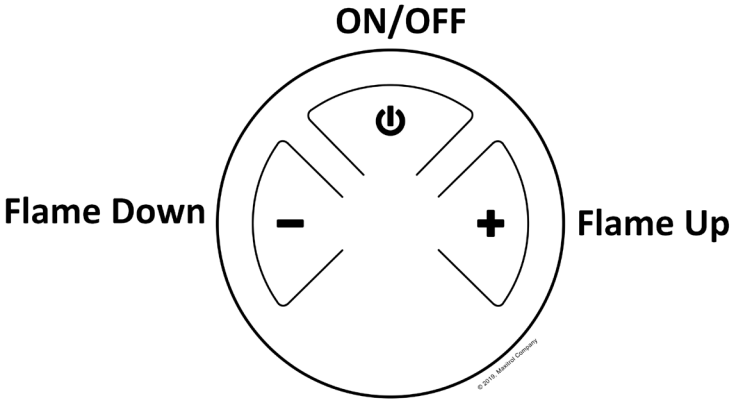

Control Option	Radio Frequency	Power Supply	
Puck Handset	918.0 MHz (U.S. & Canada)	2 x 1.5V AAA batteries (quality alkaline recommended)	Replace batteries after 2 years or when low battery indicator appears on handset display
IMPORTANT: For safety/communication purposes, Puck handset must be located within 26 feet of the receiver.			

NOTE: Any device that functions using the same radio frequency as the handset will be affected when handset is in use.

Operating Instructions

Instructions for operating the Puck Handset are shown below.

Turning the Fireplace On/Off

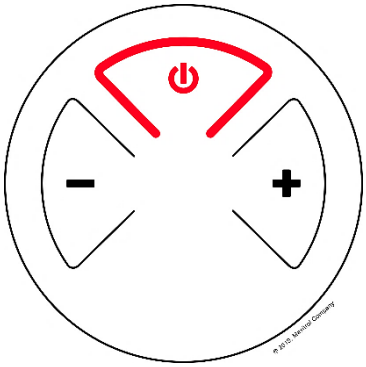

ON:

- Firmly press and hold the ⏻ button until two short beeps confirms the start sequence has begun; release button.

OFF:

- Firmly press the ⏻ button.

Increase/Decrease Flame Height

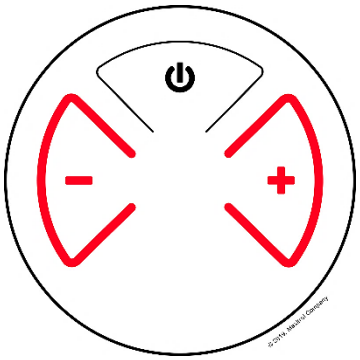

INCREASE:

- To increase flame height, press and hold + button.

DECREASE:

- To decrease flame height, press and hold − button.
- Holding the − button long enough sets the fireplace to pilot flame (Standby Mode).

Designated Flame Settings

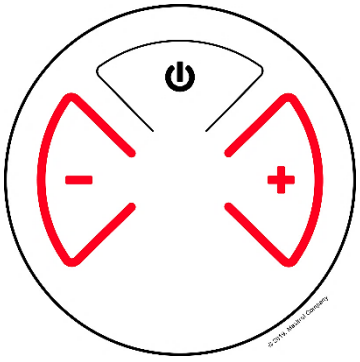

DESIGNATED LOW FLAME SETTING

- To go to designated low flame setting, double-click − button.

NOTE: Flame goes to High Flame before going to Low Flame.

DESIGNATED HIGH FLAME SETTING

- To go to designated high flame setting, double-click + button.

Wall Switch

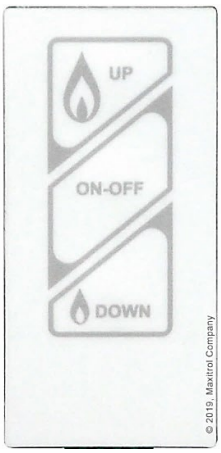

Control Option	Radio Frequency	Power Supply
Wall Switch	N/A	N/A
IMPORTANT: For safety/communication purposes, the 10-button handset must be located within 26 feet of the receiver.		

Operating Instructions

Turning the Fireplace On/Off

ON: Press and hold the **ON-OFF** button until two short beeps confirms the start sequence has begun; release button.

OFF: Press the **ON-OFF** button.

Flame Height Adjustment

INCREASE: To increase flame height, press and hold (up flame) button.

DECREASE: To decrease flame height, press and hold (down flame) button.

Holding the (down flame) button long enough sets the fireplace to pilot flame (Standby Mode).

MyFire App

MyFire.
Mertik Maxitrol GmbH & Co. KG

IMPORTANT: For safety/communication purposes, the 10-button handset must be located within 26 feet of the receiver.

NOTE: The MyFire Wi-Fi box is required for MyFire operation.

MyFire Wi-Fi Box

The MyFire Wi-Fi router box provides the Wi-Fi connection that allows the MyFire App to operate the fireplace.

Part	Radio Frequency	Power Supply	Wireless Communication
MyFire Wi-Fi Box	2.4 GHz	Connects to Receiver	WPA2 authentication AES 256-bit encryption security Compatible with IEEE 802.11 b/g/n

Fireplace Maintenance

General Maintenance

All servicing, maintenance, interior cleaning and handling of the fireplace, parts and glass must be performed by an authorized Ortal dealer service technician only.

Servicing

- Turn off the gas and electricity **BEFORE** servicing the fireplace.
- It is recommended that a routine inspection is performed at the beginning of each heating season.
- When removing glass from multisided fireplaces, only one side of glass can be removed at a time. Glass must be re-installed before removing glass from a different side.

Burner and Vent Inspections

- Periodic checks should be made of the burner for correct position and condition. Visually check the flame of the burner, making sure that the flames are steady.
- The vent system must be inspected before use. Annual inspection must be scheduled to ensure the flow of combustion and ventilation air.

Submerged Parts

- Do not use the fireplace if any part has been under water, or if you suspect that it may have been under water. The Ortal dealer service technician must inspect and, if necessary, replace any parts of the control system and any gas controls which have been under water.

Handling the Glass

Inner glass panel is 5mm ceramic glass. Exterior double glass panel is 3/16” tempered glass. Tempered glass can be sourced locally if replacement becomes necessary. Ceramic glass must be provided by Ortal.

- When removing glass from multisided fireplaces, only one side of glass can be removed at a time. Glass must be re-installed before removing glass from a different side.
- **NEVER** operate the fireplace without the glass properly securely in place.
- The glass must be removed **ONLY** by an authorized Ortal dealer service technician.
- Only an Ortal certified installer is authorized to remove the glass**.** Glass must be removed using an 8-inch glass-handling suction cup. Lower the glass to rest in a safe place to prevent damage to the glass edges.

Cleaning the Fireplace

- Only an Ortal dealer service technician can open the fireplace to clean interior surfaces.
- **ALWAYS** turn off the gas valve before cleaning.
- Do **NOT** clean when hot. Make sure fireplace has had time to cool prior to cleaning any surface or component, interior or exterior.
- Keep the fireplace clean by brushing and/or vacuuming at least once a year. This can only be performed by an Ortal dealer service technician.
- When removing glass from multisided fireplaces, only one side of glass can be removed at a time. Glass must be re-installed before removing glass from a different side.
- Clean the glass when it starts to look cloudy. Use a damp cloth for cleaning the fireplace and the door.
- Verify correct operation after servicing.

Maintenance Frequency and Equipment Checklist

- Under normal circumstances, the factory recommendation is to have the fireplace serviced at least once a year. Fireplaces meeting the following conditions should have more frequent service:
    - Fireplaces installed in commercial/public spaces should be serviced every 3 months.
    - Fireplaces installed in climates near the ocean or in other settings where corrosion buildup is more likely should be serviced every 6 months.
- Thermocouple Maintenance:
    - The thermocouple should be replaced annually or as needed in all commercial installations, and in any residential fireplace where the fireplace is operated for an average of 10 hours or more per day.
    - For all other installations, the thermocouple should be replaced every three years or as needed.

© Ortal 2021
Version 1.0, June 2021
SKU: KPMANWILDHLRSV1.0

Ortal USA
8421 Canoga Ave Canoga Park, CA 91304
T: (818) 238-7000 | F: (818) 678-0541
info@ortalheat.com | www.ortalheat.com