ORTAL
YOUR LIFE. YOUR FIRE

170H TS
Double Glass

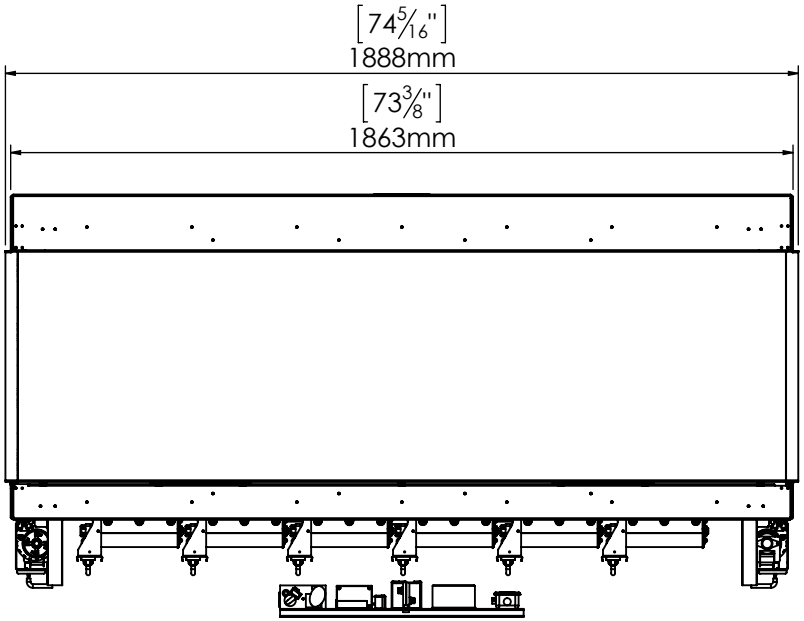

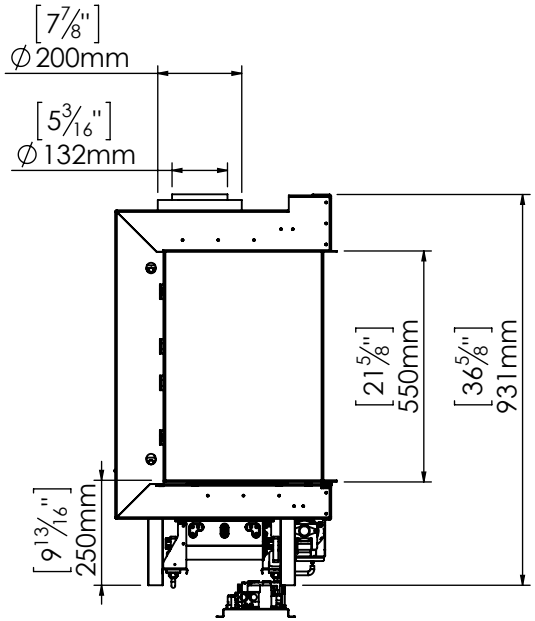

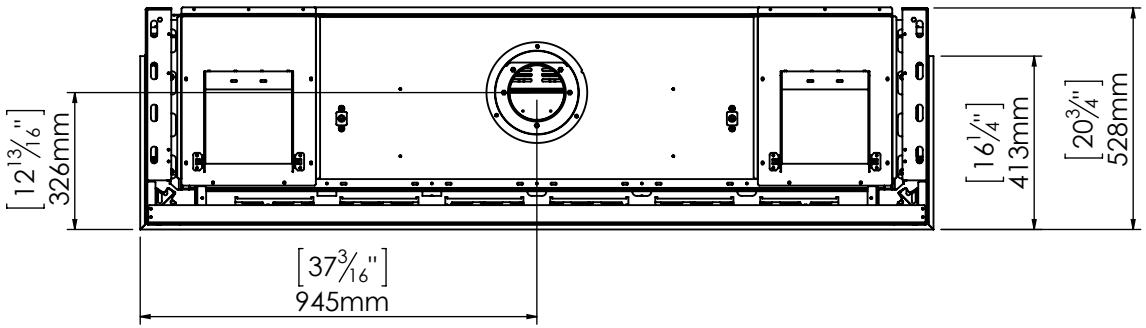

1/26/2020