ORTAL
YOUR LIFE. YOUR FIRE

Wilderness RS60H DG

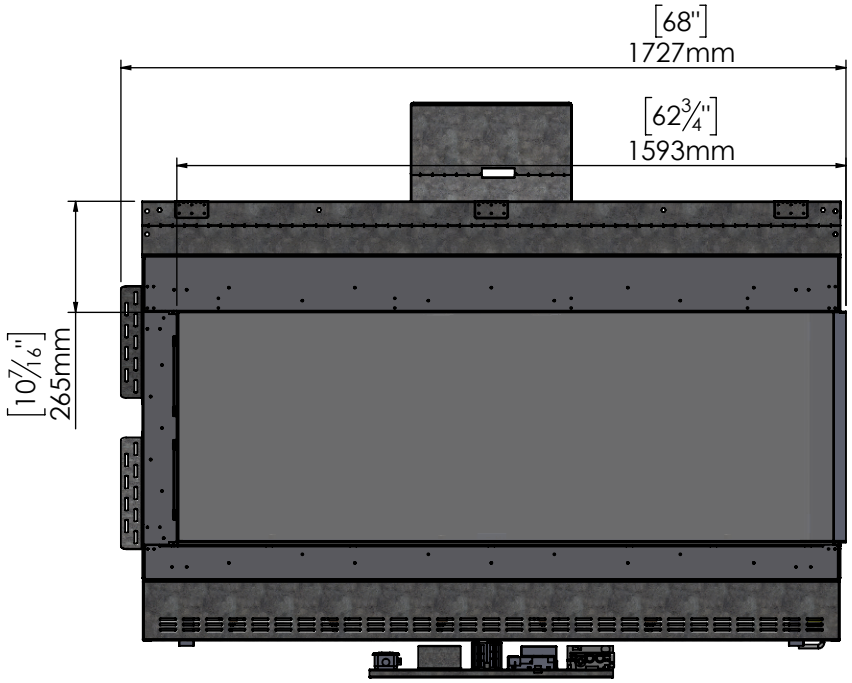

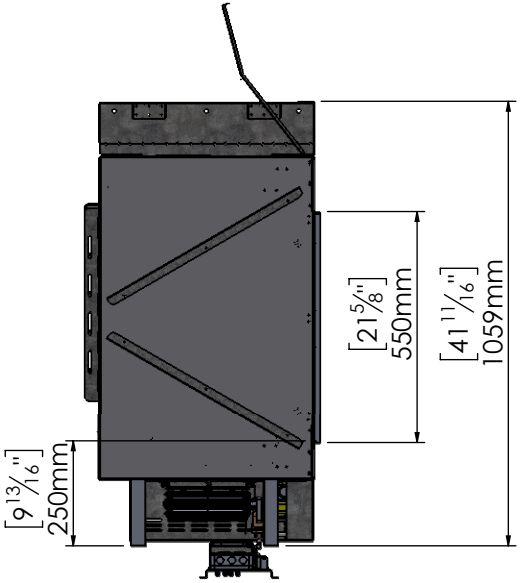

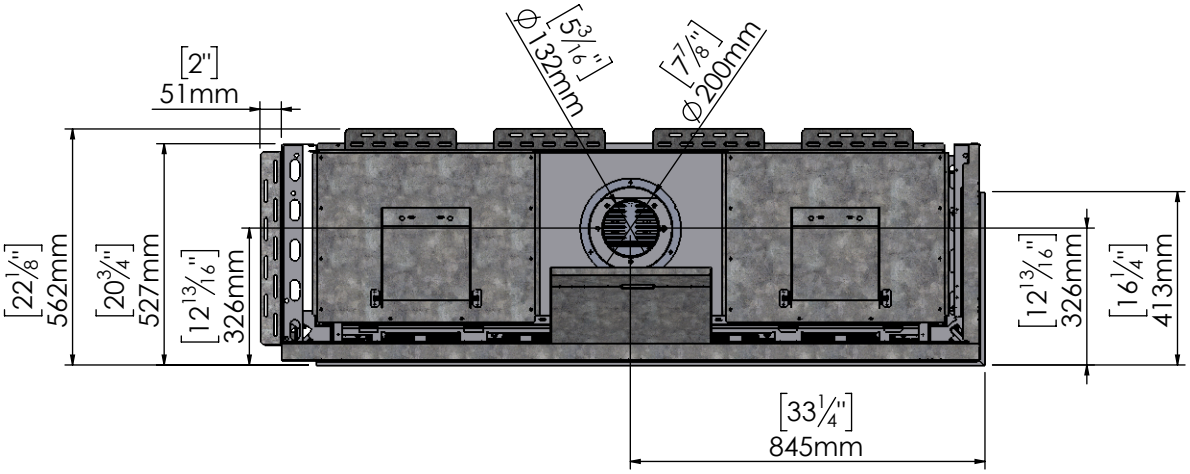

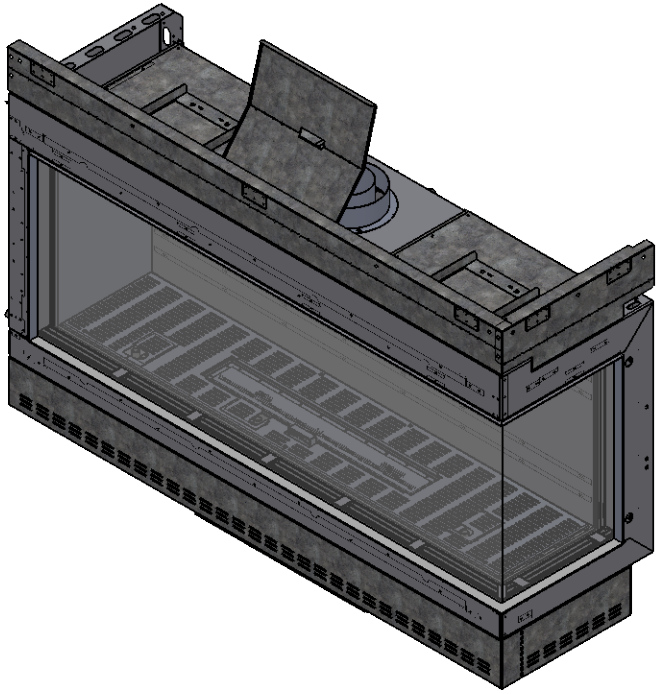

1/18/2021