INSULATION DIAGRAM (example)

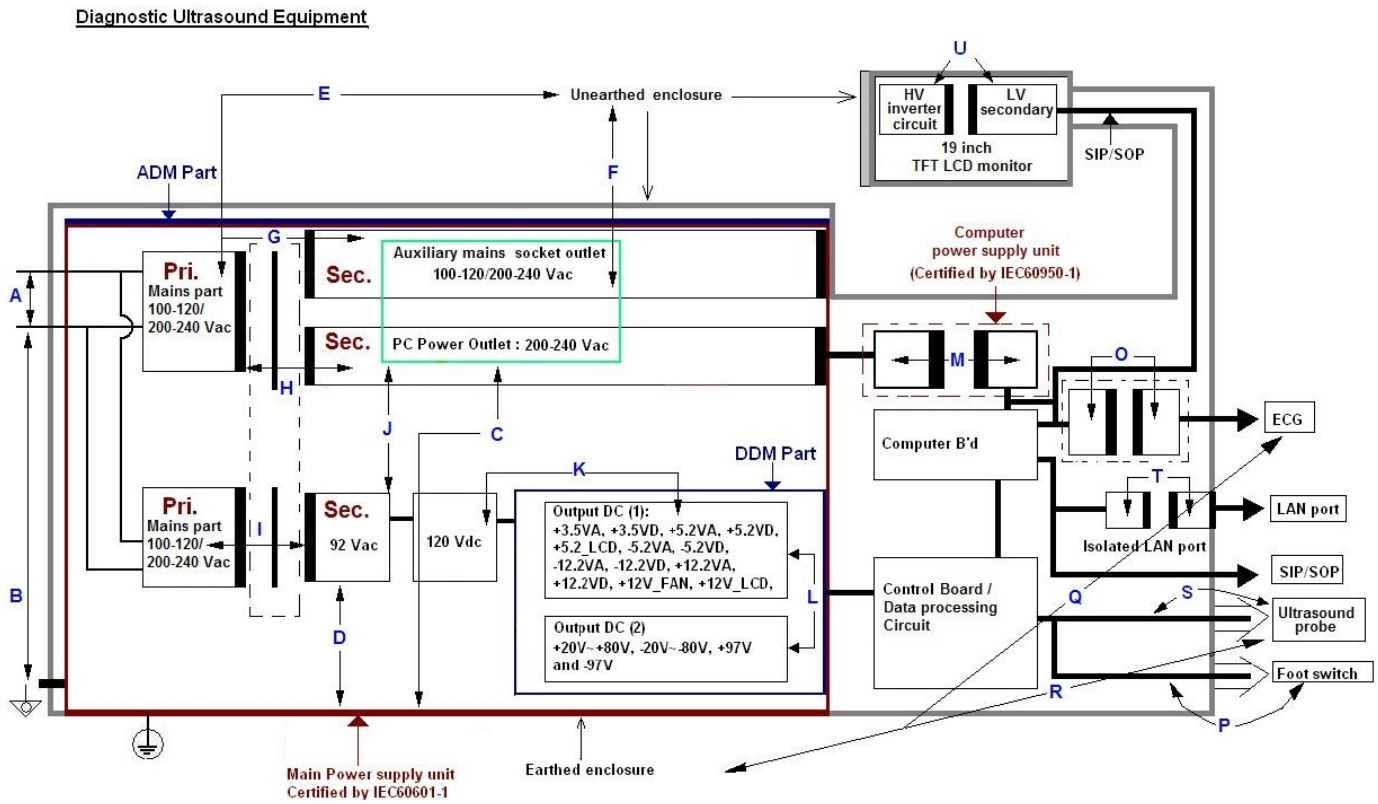

Area	Number and type of Means of Protection: MOOP, MOPP	CTI (IIIb, unless is known)	Working voltage Vrms	Working voltage Vpk	Required creepage (mm)	Required clearance (mm)	Measured creepage (mm)	Measured clearance (mm)	Remarks
A	1xMOOP	IIIb	240	340	2.5	2.0			
B	1xMOOP	IIIb	240	340	2.5	2.0			
C	1xMOOP	IIIb	240	340	2.5	2.0			
D	1xMOOP	IIIb	92	130	2.0	2.0			
…									
O	2xMOPP	IIIb	--	5 dc	3.4	1.6			
P	2xMOPP	IIIb	--	5 dc	3.4	1.6			
Q	1xMOPP	IIIb	240	340	4.0	2.5			
R	2xMOPP	IIIb	--	120 dc	6.0	3.2			
S	2xMOPP	IIIb	--	120 dc	6.0	3.2			
…									