Option 1: WTZK-1800

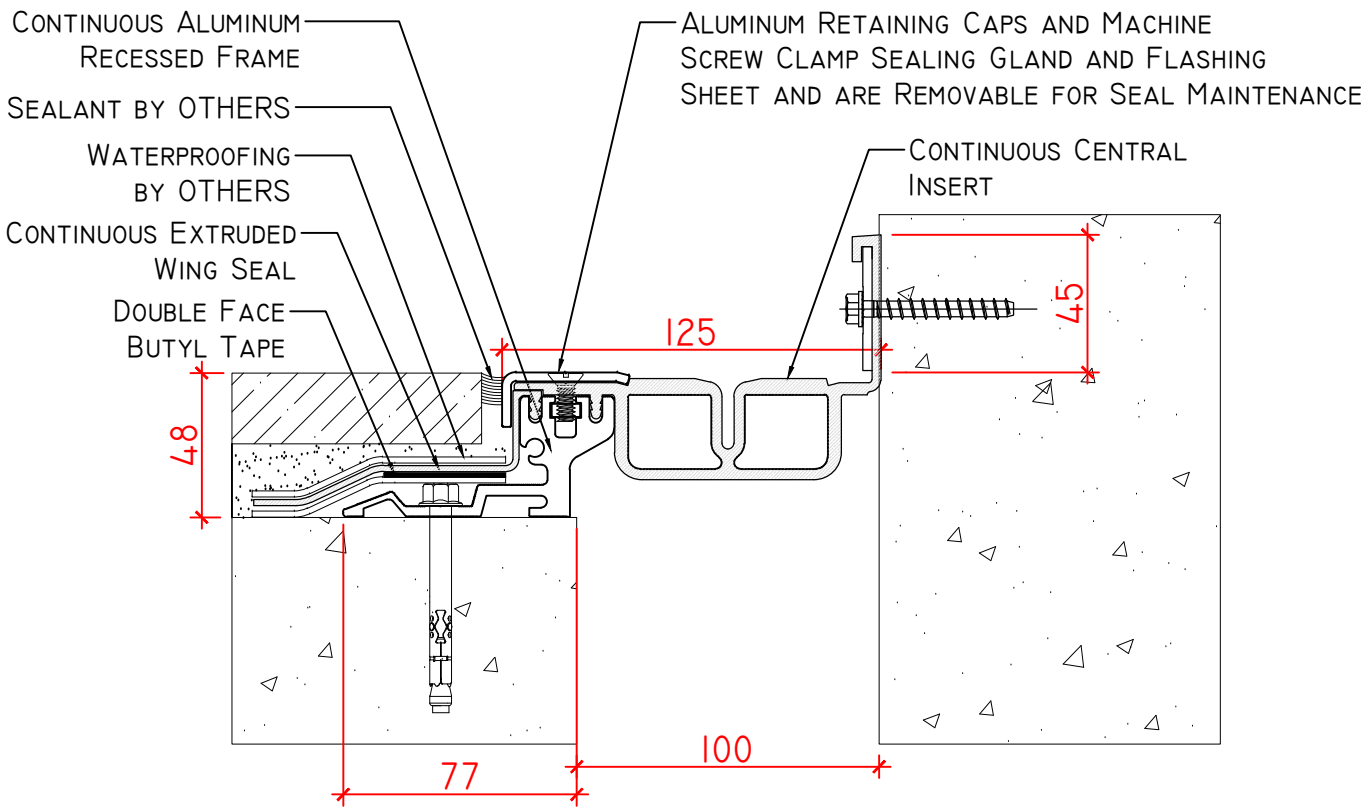

Option 2: WTZK-1800 w/ Cover Plate

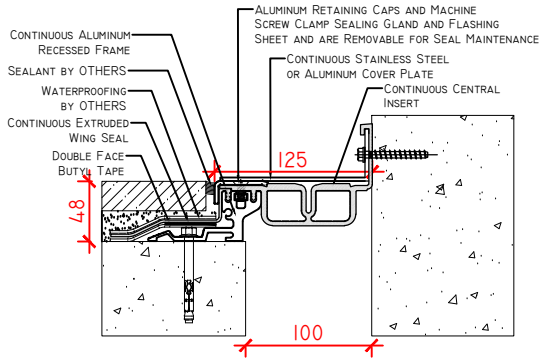

Option 3: WTZK-1800 + Fire Barrier

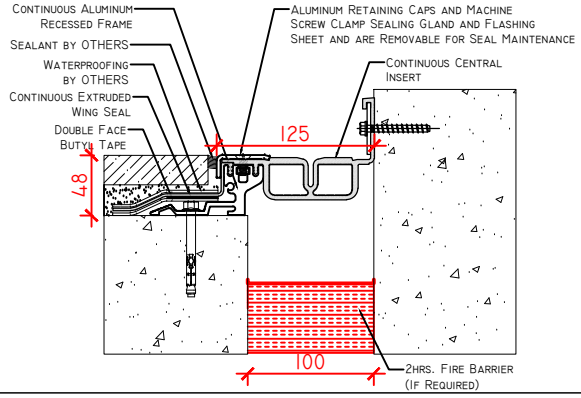

Option 4: WTZK-1800 + Water Barrier

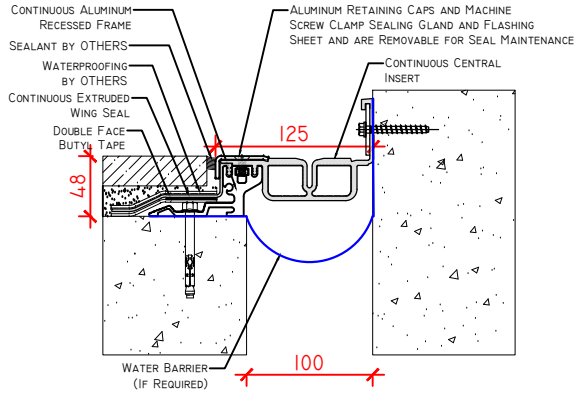

Option 5: WTZK-1800 + Water Barrier + Fire Barrier

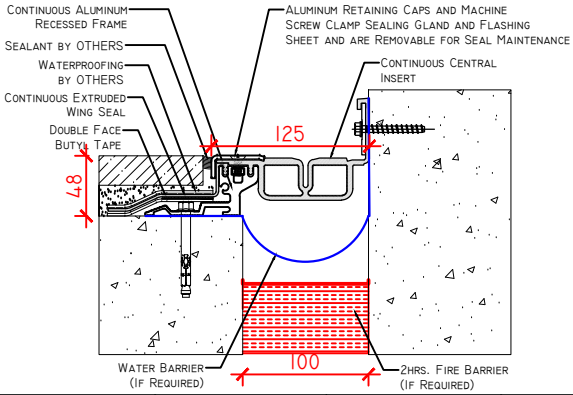

SKU	NAME	JOINT WIDTH, JW(mm)	HEIGHT, H(mm)	SIGHTLINE, S(mm)	MOVEMENT CAPACITY %	LOAD CAPACITY (kN)
WTZK180010048125	WTZK-1800-100	100	48	125	±40	35

GENOTEK

Product Type: Expansion Joint Cover

Application: Floor to Wall Watertight Condition

Approved by Client:

Disclaimer: The size of the profile may vary ±3% due to extrusion process. For more information,please contact technical@genotek.global.