FRANKLIN CONTROL SYSTEMS

Q-Link Manual

Fan & Pump Optimized Variable Frequency Drive

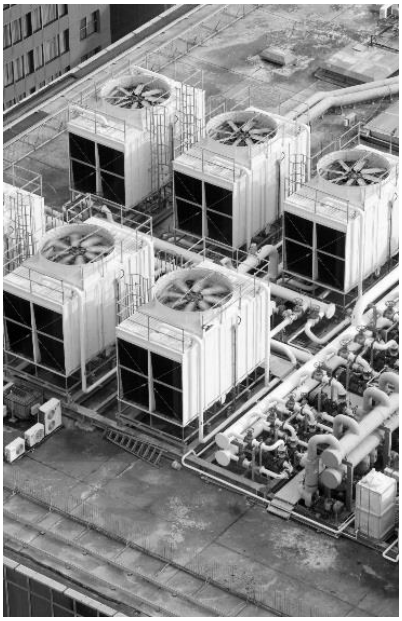

Q-LINK
VARIABLE FREQUENCY DRIVE

Base Drive,
Bypass Drive,
Drive with Disconnect
200~480V (3~28A)

Installation, Programming Operation, & Maintenance Manual

V2.00.09.17

CAUTION, SAFETY WARNING

As with all electrical products, read manual thoroughly before operating. Only qualified, expert personnel should perform maintenance and installation. Contact the nearest authorized service facility for examination, repair, or adjustment. Do not disassemble or repair unit; death or injury due to electrical shock or fire hazard may result.

Product improvement is a continual process at Franklin Control Systems. Specifications and manual data subject to change. Consult factory for additional information.

FRANKLIN CONTROL SYSTEMS

franklin-controls.com | 1.800.962.3787

SAFETY INSTRUCTIONS

To prevent injury and property damage, follow these instructions during the installation and operation of VFD.

Incorrect operation due to ignoring these instructions may cause harm or damage to personnel and/or equipment. The following symbols are used throughout the manual to highlight important information.

⚠ **DANGER**	**This symbol indicates death or serious injury can occur if you do not follow instructions.**
⚠ **WARNING**	**This symbol indicates the possibility of death or serious injury.**
⚠ **CAUTION**	**This symbol indicates the possibility of damage to VFD or other components.**

■ **The meaning of each symbol in this manual and on your equipment, is as follows.**

⚠ **This is the safety alert symbol.**

Read and follow instructions carefully to avoid a dangerous situation.

This symbol alerts the user to the presence of "dangerous voltage" inside the product that might cause bodily harm or electric shock.

■ **This manual should be given to the person who actually uses the VFD and is responsible for its maintenance.**

⚠ WARNING

- **Do not remove VFD cover for wiring or periodic inspections while power is applied or the unit is in operation.**
  Otherwise, electric shock could occur.

- **Wiring and periodic inspections should be performed at least 5 minutes after disconnecting the input power with DC link voltage below 30VDC.**
  Otherwise, electric shock could occur.

- **Operate VFD and control devices with dry hands.**
  Otherwise, electric shock could occur.

- **Do not use VFD if power or motor cable is damaged.**
  Otherwise, electric shock could occur.

CAUTION

- **Install VFD on a non-flammable surface. Do not place flammable materials nearby.**
  Otherwise, fire could occur.

- **Disconnect the input power if VFD has been damaged.**
  Otherwise, it could result in a secondary accident and fire.

- **Do not touch VFD after shutting down or disconnecting it. It can remain hot for a few minutes.**
  Otherwise, bodily injuries such as skin-burn or damage could occur.

- **Do not apply power to a damaged VFD or to VFD with missing parts.**
  Otherwise, electric shock could occur.

- **Do not allow lint, paper, wood chips, dust, metallic chips or other foreign material into the drive.**

Otherwise, fire or accident could occur

PRECAUTIONS

(1) Handling and installation

- Check VFD environmental conditions and electrical requirements before purchasing VFD.
- Do not stack VFD boxes higher than standard 48" cube height when palletizing for storage.
- Do not place heavy items on VFD.
- Install and wire VFD according to the instructions in this manual.
- Do not open the cover during delivery.
- Do not drop VFD or subject it to hard impact.
- Take protective measures against ESD (Electrostatic Discharge) before touching control boards during inspection, installation or repair.

(2) Wiring

- Input power wires should be connected to R/L1, S/L2 and T/L3 VFD terminals for three-phase.
- Power Ground and Motor Ground should be connected to a VFD ground terminal.
- **Do not connect** power factor correction capacitors, surge suppressors, or RFI filter to the **VFD output**.
- The phase sequence on VFD terminals U/T1, V/T2, W/T3 to motor will affect the direction of motor rotation. The input power phase sequence does not affect a direction of motor rotation.
- Incorrect VFD terminal wiring could result in VFD and/or equipment damage.
- Reversing the polarity (+/-) of the digital control terminals can damage VFD.
- Perform wiring after VFD has been mounted. Otherwise, electric shock or bodily injury can occur.
- Do not modify VFD internal components or circuits.

(3) Start-up

- Check if input power voltage is within acceptable range before applying power to VFD
- Check all the motor data and control parameters when VFD is powered. Some parameter values might require adjustment depending on the application.
- Start VFD in forward direction and check the motor rotation. Swap any two motor leads to change the motor rotation when VFD power is off. It is not recommended to correct motor rotation by using reverse start command to run motor forward.
- Run motor up to full speed and check if system has resonance frequencies (vibration) in the normal speed range. Make notes at what frequencies the vibration started and stopped. Set these frequencies in Skip Frequency parameters to prevent a system vibration.
- Check the motor run current on VFD display while running at full speed and if it is higher than motor FLA, check motor wiring and for any mechanical problems (valves, dampers, etc.) that could create extra load on motor shaft.

(4) Operation

- When the Auto restart function is selected, VFD can restart multiple times automatically during operation.
- If restart after fault reset is selected, the VFD can start automatically after fault reset.
- Do not modify VFD internal components and circuits.
- Set correct motor data from the motor nameplate and overload protection parameters for proper motor overload protection.
- The use of any disconnecting device (contactor, disconnect etc.) in motor circuit during VFD run can cause a damage of VFD power components. Stop VFD before opening the motor circuit with disconnect or contactor.
- Power factor capacitors and generators may become overheated and damaged due to harmonics distortion created by VFD.
- Use, if possible, an inverter rated motor or motor with insulation class “F” or higher. The VFD generates high frequency output pulses with spikes, which can deteriorate motor winding insulation and eventually damage the motor. The longer distance to the motor the higher amplitude of these voltage spikes will be applied to motor winding. Any cables with paralleled wires will increase the amplitude of these spikes at motor terminals.
- Install output reactor or filter to protect motor winding insulation based on distance range from VFD to a motor specified in section 2.3 - Basic Configuration. Install an output reactor for shorter distance than specified on page 3-7 if motor is old or if insulation class is lower than “F”.
- VFD can operate motor at frequencies higher than 50HZ or 60Hz. Verify the maximum allowed speed with motor and machinery manufacturers prior to increasing a VFD output frequency because it can overheat motor or damage machinery.

(5) Safety

- If required, provide an emergency mechanical brake to prevent any hazardous conditions if VFD fails during operation.
- Some VFD parameters are set as default to automatically start VFD in some applications. Disable these parameters if automatic start is not safe for personnel or equipment.

(6) Maintenance, Inspection and Parts Replacement

- Disconnect all motor leads from VFD before checking the motor insulation with a megohmmeter. The Megger tester 1000VDC output can damage the VFD power components.
- Refer to Chapter 9 for periodic inspection and parts replacement details.

(7) Disposal

- Dispose of VFD properly as industrial equipment waste.

TABLE OF CONTENTS

CHAPTER 1 - PRODUCT OVERVIEW

1.1 Introduction

The Quick Link (Q-Link) variable frequency drive (VFD) provides a higher quality user experience. Q-Link features an organic light emitting diode (OLED) display, with an easy to use control interface and onboard navigation menu.

Q-Link's iOS and Android applications interface affords secure Bluetooth connectivity for the added convenience of device monitoring and increased serviceability response times. Q-Link's mobile app allows users to commission, monitor, and initiate automated VFD reports.

iOS App Store: http://apple.co/2xdGHZN Google Play Store: http://bit.ly/2wyZFgj

1.2 Q-Link VFD Models

- ***Q-Link Base Drive*:** Current rated stand-alone VFD.

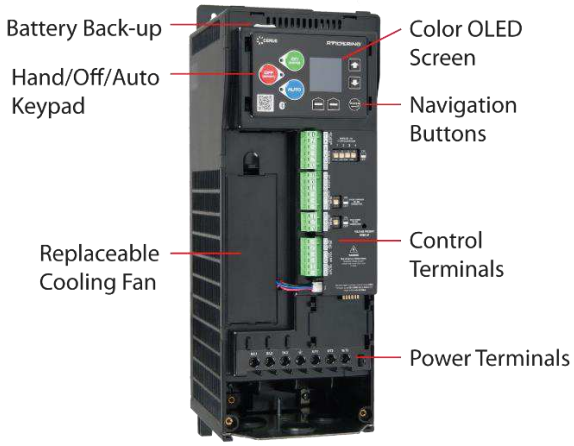

- ***Q-Link Smart Bypass***: Current rated drive, with integrated smart bypass.

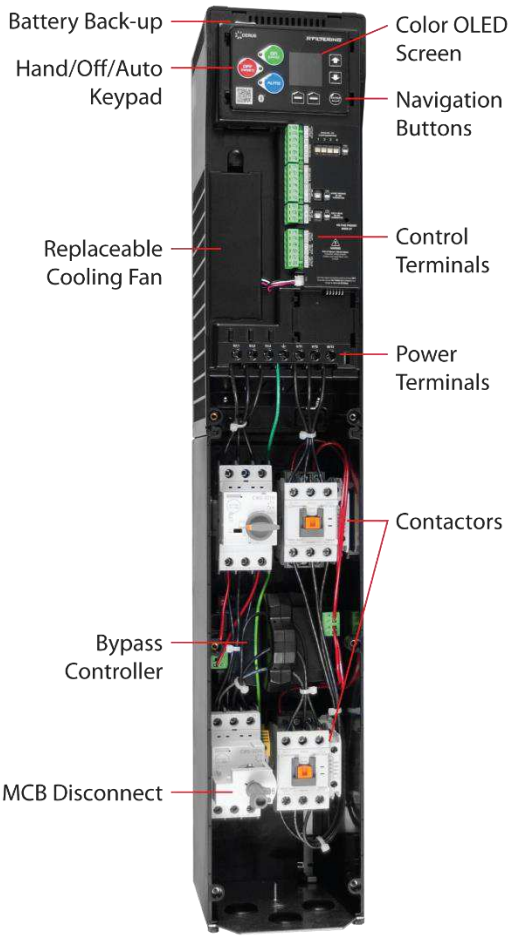

- ***Q-Link Drive with Disconnect***: Current rated drive, with integrated disconnect switch.

- ***Q-Link HP Rated Drive***: HP rated stand-alone VFD.

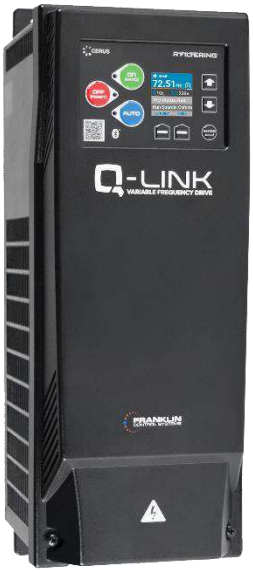

CHAPTER 2 - BASIC INFORMATION

2.1 Part Number Code and Initial Inspection

2.1.1 Part Number Anatomy

Amperage Rated VFD (Base Drive, Smart Bypass, and Drive with Disconnect)

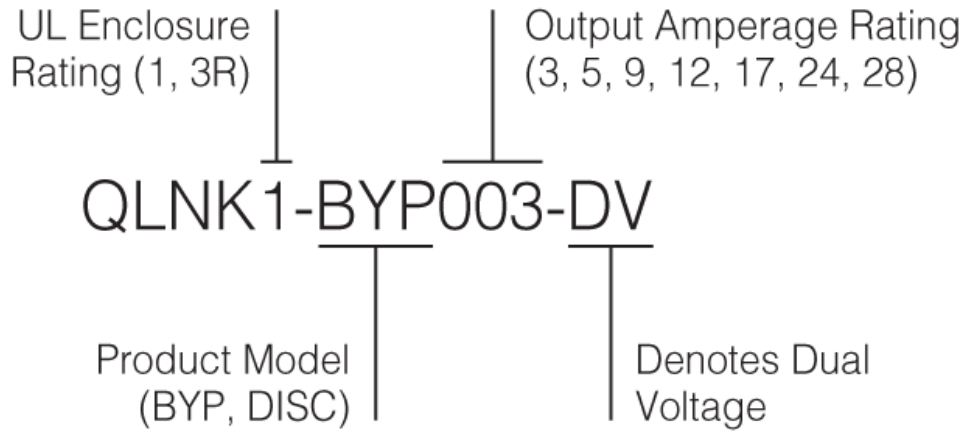

Horsepower Rated VFD

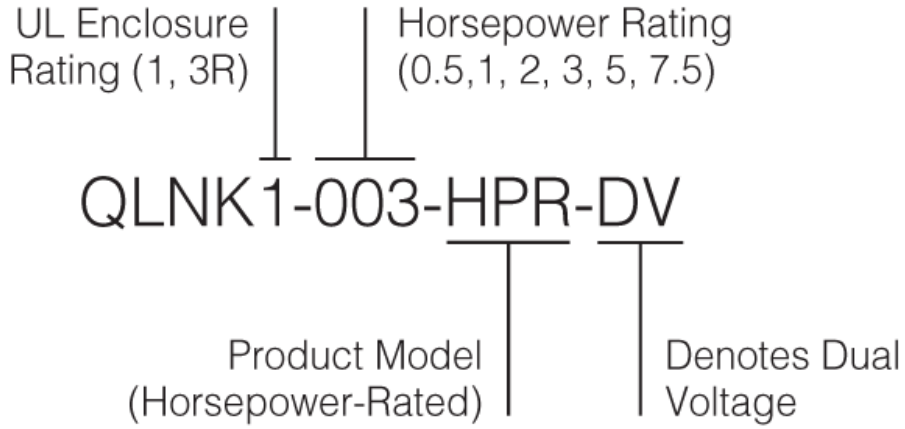

2.1.2 UL Label

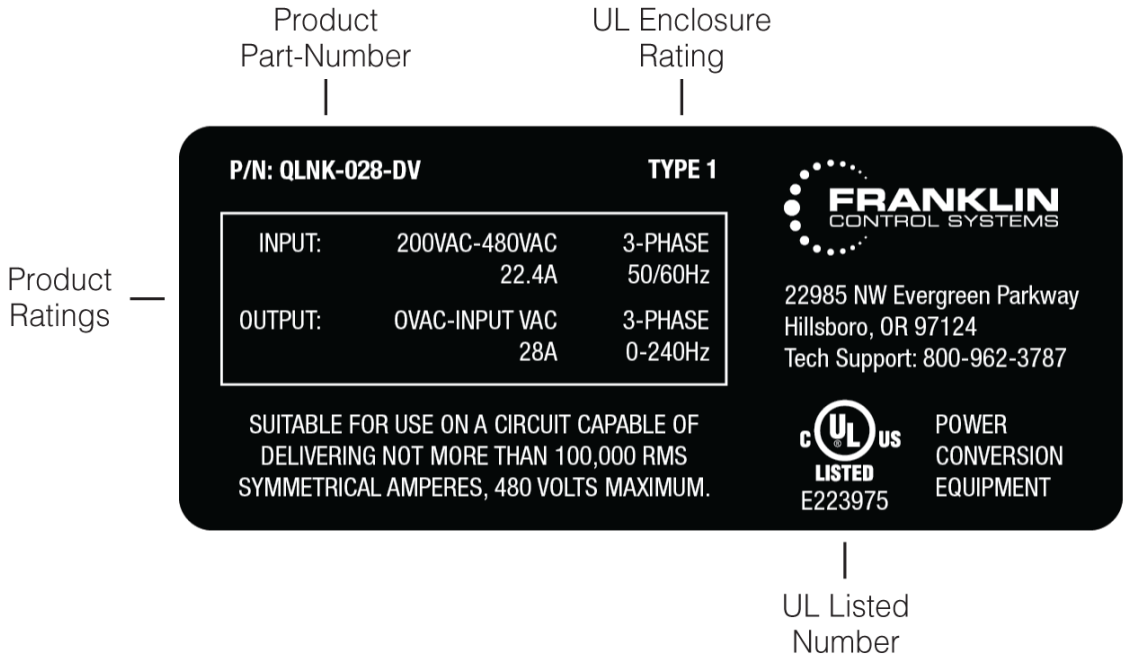
Product Part-Number
UL Enclosure Rating
Product Ratings
P/N: QLNK-028-DV
TYPE 1
INPUT: 200VAC-480VAC 22.4A 3-PHASE 50/60Hz
OUTPUT: 0VAC-INPUT VAC 28A 3-PHASE 0-240Hz
SUITABLE FOR USE ON A CIRCUIT CAPABLE OF DELIVERING NOT MORE THAN 100,000 RMS SYMMETRICAL AMPERES, 480 VOLTS MAXIMUM.
FRANKLIN CONTROL SYSTEMS
22985 NW Evergreen Parkway
Hillsboro, OR 97124
Tech Support: 800-962-3787
c UL us LISTED
E223975
POWER CONVERSION EQUIPMENT
UL Listed Number

2.2 VFD Unpacking and Inspection

Remove VFD from its packing and inspect its exterior for shipping damage. If there is damage, notify the shipping agent and your FCS (Franklin Control Systems) sales representative.

Step 1. Verify the part-number and product ratings on the identification label are correct and that the shipping box is not visiably damaged.

Step 2. Open box and verify the VFD is still in the foam shipping blocks and plastic wrap, and that the quickstart guide is included in the box.

Step 3. Remove VFD from the box and foam shipping blocks, determine if the VFD is undamaged and the plastic overwrap is unopened.

(Figure 2.2.1)

Remove the VFD cover and inspect VFD for any damage or foreign objects. Check VFD part number, current rating and nominal voltage on the sticker attached to the side of the VFD. Verify if VFD electrical and environmental ratings are correct and adequate for the application.

2.3 Basic Configuration

The following are the most common devices used in motor control branch operated by VFD. Adequate peripheral devices must be selected and correct connections made to ensure proper VFD operation. An incorrectly applied or installed VFD can result in system malfunction or reduction in product life as well as component damage. You must read and understand this manual thoroughly before proceeding with installation.

AC Power Source	Use three-phase or single-phase power source with voltage within the permissible range of VFD input power rating. Size VFD properly for single-phase power.
MCCB	Select circuit breakers or fuses in accordance with NEC and applicable local codes.
Inline Magnetic Contactor	Do not use input power contactor for frequent starting and stopping the VFD, otherwise VFD power components can be damaged.
EMI/ RFI Filter	Install EMI/RFI filter to decrease VFD Electromagnetic and Radio Frequency Interference with operation of sensitive electronic equipment.
Variable Frequency Drive	Install VFD with proper orientation, ventilation, spacing etc. according to the manufacturer requirements described in this manual with all necessary protective and filtering devices to provide long and reliable VFD operation.
AC Load Reactor or Output Filter	Install a load (output) reactor to protect motor windings if distance from 460V or 600V VFD to a motor is in the range 45-100 feet or output dV/dt filter for a range 100-1000 feet (800 feet for submersible pumps) or a sine wave filter for greater distances.
Three Phase AC Induction Motor	The P series VFD is not compatible with permanent magnet motors and servomotors. Opening the motor circuit by disconnect or contactor during VFD run can damage VFD power components.

Note: Do not install magnetic contactor in the motor circuit for start/stop or emergency stop purpose. Opening the motor circuit when VFD runs at above 50% its rated capacity can cause VFD power components failure.

CHAPTER 3 – SPECIFICATIONS

3.1 Standalone VFD Ratings

Standalone VFD - 200–480

Part Number	HP			Input Current	Output Current
	208V	230V	480V		
QLNK-003-DV	0.5	0.5	1	2.4	3
QLNK-005-DV	1	1	3	4	5
QLNK-009-DV	2	2	5	7.2	9
QLNK-012-DV	3	3	7.5	9.6	12
QLNK-017-DV	5	5	10	13.6	17
QLNK-024-DV	5	7.5	15	19.2	24
QLNK-028-DV	7.5	10	20	22.4	28

3.2 VFD Smart Bypass Ratings

VFD Smart Bypass - 200–480

Part Number	HP			Input Current	Output Current
	208V	230V	480V		
QLNK1-BYP003-DV	0.5	0.5	1	2.4	3
QLNK1-BYP005-DV	1	1	3	4	5
QLNK1-BYP009-DV	2	2	5	7.2	9
QLNK1-BYP012-DV	3	3	7.5	9.6	12
QLNK1-BYP017-DV	5	5	10	13.6	17
QLNK1-BYP024-DV	5	7.5	15	19.2	24
QLNK1-BYP028-DV	7.5	10	20	22.4	28

3.3 VFD with Disconnect Ratings

VFD with Disconnect - 200–480

Part Number	HP			Input Current	Output Current
	208V	230V	480V		
QLNK1-DISC003-DV	0.5	0.5	1	2.4	3
QLNK1-DISC005-DV	1	1	3	4	5
QLNK1-DISC009-DV	2	2	5	7.2	9
QLNK1-DISC012-DV	3	3	7.5	9.6	12
QLNK1-DISC017-DV	5	5	10	13.6	17
QLNK1-DISC024-DV	5	7.5	15	19.2	24
QLNK1-DISC028-DV	7.5	10	20	22.4	28

3.4 VFD HP-Rated Ratings

VFD HP-Rated - 200–480

Part Number	HP	Input Current	Output Current
	208-480V		
QLNK-000-HPR-DV	0.5	2.4	3
QLNK-001-HPR-DV	1	4	5
QLNK-002-HPR-DV	2	7.2	9
QLNK-003-HPR-DV	3	9.6	12
QLNK-005-HPR-DV	5	13.6	17
QLNK-007-HPR-DV	7.5	22.4	28

3.5 Standalone and HP-Rated VFD Torque Ratings

VFD - Wire Size & Torque Ratings

VFD Part Number	Input Power		Output Power		Mounting Screw Size		Control Terminals		Option Board Terminals	
	Wire Size	Screw Torque	Wire Size	Screw Torque	Mounting Screw	Screw Torque	Wire Size	Screw Torque	Wire Size	Screw Torque
QLNK-003-DV–QLNK-028-DV	18–8AWG (1–10mm²)	14in-lb (1.6Nm)	18–8AWG (1–10mm²)	14in-lb (1.6Nm)	#10 (M5)	15in-lb (1.7Nm)	30–12AWG (0.2–2.5mm²)	4.5in-lb (0.51Nm)	24-12AWG (0.5-2.5mm²)	4.5 in-lb (0.5NM)
QLNK-003-HPR-DV–QLNK-028-HPR-DV										

3.6 VFD Smart Bypass Torque Ratings

VFD with Smart Bypass - Wire Size & Torque Ratings

Part Number	Input Power		Output Power		Mounting Screw Size		Control Terminals		Option Board Terminals	
	Wire Size	Screw Torque	Wire Size	Screw Torque	Mounting Screw	Screw Torque	Wire Size	Screw Torque	Wire Size	Screw Torque
QLNK1-BYP003-DV–QLNK1-BYP005-DV	18–8AWG (1–10mm²)	22in-lb (2.5Nm)	18–10AWG (1–6mm²)	20in-lb (2.25Nm)	#10 (M5)	15in-lb (1.7Nm)	30–12AWG (0.2–2.5mm²)	4.5in-lb (0.51Nm)	24-12AWG (0.5-2.5mm²)	4.5 in-lb (0.5NM)
QLNK1-BYP009-DV			16–10AWG (1.5–6mm²)							
QLNK1-BYP012-DV			16–8AWG (1.5–10mm²)							
QLNK1-BYP017-DV			14–8AWG (2.5–10mm²)							
QLNK1-BYP024-DV			12–8AWG (2.5–10mm²)							
QLNK1-BYP028-DV			8–6AWG (10–16mm²)	35in-lb (4Nm)						

3.7 VFD Disconnect Torque Ratings

VFD with Disconnect - Wire Size & Torque Ratings

VFD Part Number	Input Power		Output Power		Mounting Screw Size		Control Terminals		Option Board Terminals	
	Wire Size	Screw Torque	Wire Size	Screw Torque	Mounting Screw	Screw Torque	Wire Size	Screw Torque	Wire Size	Screw Torque
QLNK1-DISC003-DV–QLNK1-DISC028-DV	18–8AWG (1–10mm²)	22in-lb (2.5Nm)	18–8AWG (1–10mm²)	14in-lb (1.6Nm)	#10 (M5)	15in-lb (1.69Nm)	30–12AWG (0.2–2.5mm²)	4.5in-lb (0.51Nm)	24-12AWG (0.5-2.5mm²)	4.5 in-lb (0.5NM)

3.8 Standalone and HP-Rated VFD Dimensions

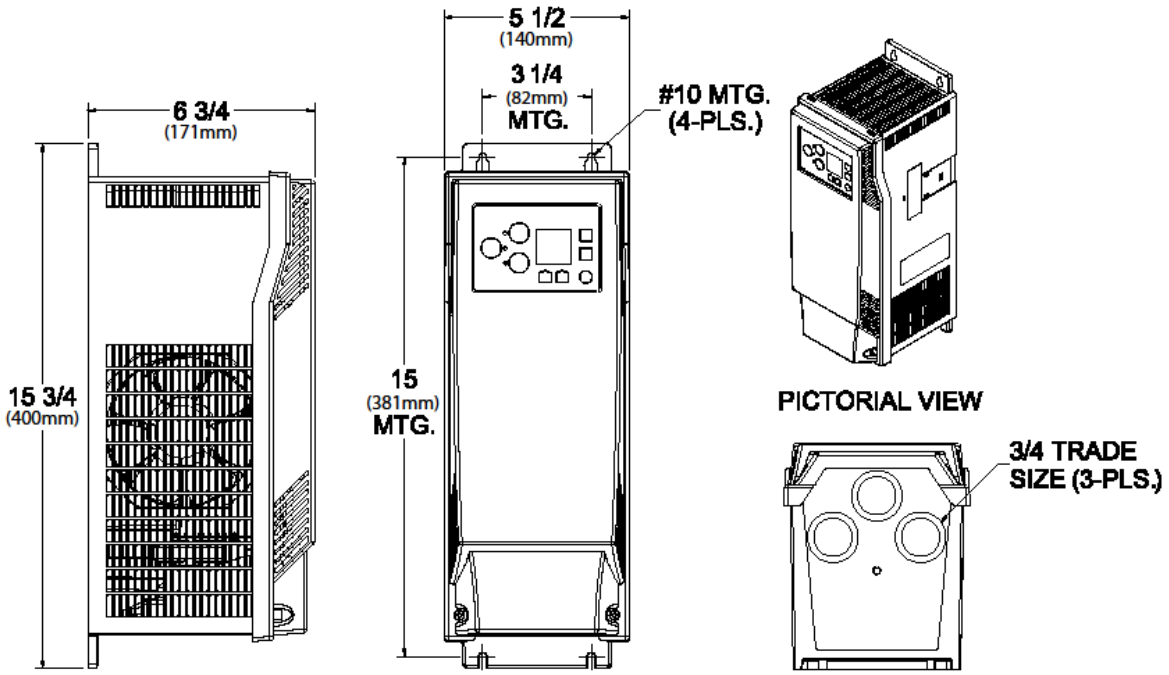

3.9 Smart Bypass and VFD with Disconnect Dimensions

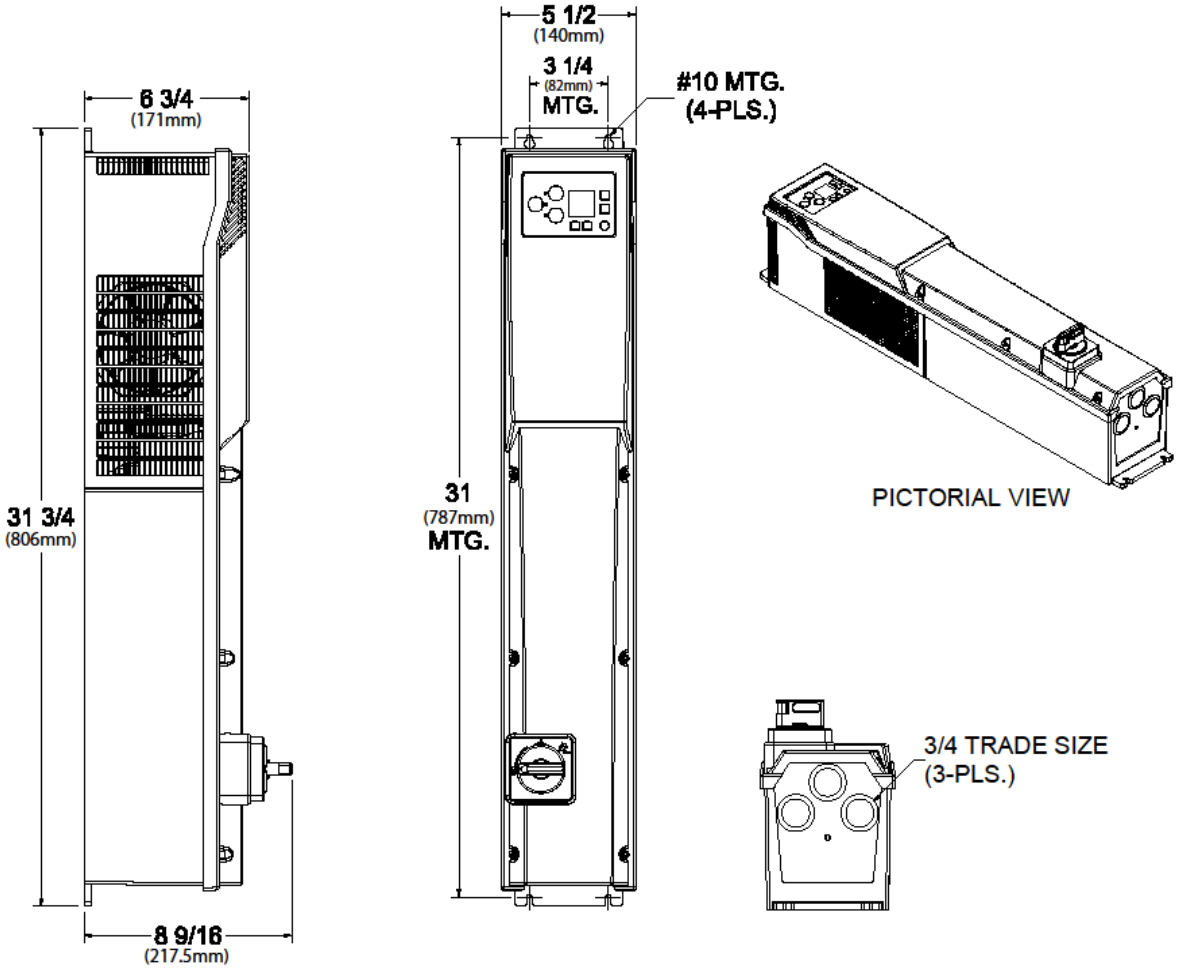

3.10 Common Specifications

Input Ratings	**Voltage**	200-480V (+15%/-10%)
	Frequency	50/60 (+/-5%)
	Efficiency	>= 98%, full load and full voltage
	Displacement Power Factor	>.99
Output Ratings	**HP**	1-10 HP (200V), 1-20HP (460V)
	Frequency	0-240Hz
	Voltage	0-100% of Supply Voltage
Control	**Control Method**	V/F Scalar Pulse Width Modulation
	Carrier Frequency	2kHz - 10kHz, 0.1kHz resolution, Default 2.5kHz
	Output Frequency Resolution	0.01Hz
	Frequency Accuracy	Digital: 0.01 % of Max. Output Frequency Analog: 1 % of Max. Output Frequency
	V/F Ratio	Linear, Squared Pattern
	Overload Capacity	110% for 60s
Operation	**Operation Method**	OLED display and keypad, HOA buttons, Terminals, Bluetooth mobile app, Communications
	Frequency Setting	Keypad, Analog Voltage and Current 0-10V, 4-20mA, Bluetooth mobile app, Communications
	Programming Method	OLED display and keypad, Bluetooth mobile app, Communications
	PID	Standard
	Communications Interface	Physical (RS-485, Bluetooth) Protocols (Native BACnet MS/TP, Modbus RTU)
	Logging	Faults/Alarms/Parameter Changes - w/ Real Time & Date)
	Indication	3 LEDs: Hand, Off, Auto
	Operation Functions	Frequency Limit, Skip Frequencies, Reverse Rotation Prevention, Auto Restart, Flying Start, Damper Control, Motor Pre-Heat, Torque Boost, Stall Prevention, DC Trip Prevention, DC Braking, DC Start, Analog Signal Loss, Auto Bypass (Bypass models only), Fireman's override, Auto Fault Restart

3.11 I/O Specifications

Dry Inputs	**Count**	4 configurable (NO or NC)
	Programmable Inputs	None / Enable / Fireman's Override / Speed- A / Speed- B / Setpoint-A / Setpoint-B / Damper LSW / Flow Switch / External Trip / Run Forward / Run Reverse / 2nd Acc/Dec Time / 3-Wire Start / 3-Wire Stop / HOA Auto / HOA Hand Shutdown / Fault Reset / Bypass / Switch 1A to 2A/3A
	Max Rating	Internal 24 VDC power
Wet (Voltage) Inputs	**Count**	2 configurable (NO or NC) (Active High or Active Low)
	Programmable Inputs	None / Enable / Fireman's Override / Speed- A / Speed- B / Setpoint-A / Setpoint-B / Damper LSW / Flow Switch / External Trip / Run Forward / Run Reverse / 2nd Acc/Dec Time / 3-Wire Start / 3-Wire Stop / HOA Auto / HOA Hand / Shutdown / Fault Reset / Bypass / Switch 1A to 2A/3A
	Max Rating	12-240VAC/VDC
Analog I/O	**Count**	3 Selectable. (1A, 2A, 3A) 1A = AI, 0-10V/0-24V/4-20mA 2A = AIO, 0-10V input or 0-10V/4-20mA output 3A = AI 4-20mA
	Mode	Voltage or Current
	Level	0-10VDC or 4-20mA
Analog Output	**Control Power**	24VDC, 50mA Max
Damper Output	**Count**	1 damper actuator output
	Control Power Rating	24VDC, 0.5Amp Max
Relay Outputs	**Count**	2 Relay Outputs
	Programmable	Status, Run, Fault, SW Configurable
	Control Power Rating	125VAC, 1.25Amp Max, Max switching voltage 250VAC

3.12 Environment

VFD's are to be used in a controlled environment. The following table lists the Q-Link VFD's environmental requirements:

Environmental	**Ambient Temperature**	-10 to 40°C (104°F), 50°C (122°F) by following De-rating table on Appendix A
	Storage Temperature	-20 to 65°C (149°F)
	Location	Pollution Degree 2 Environment
	Altitude	1000m (3280ft) above sea level. De-rate 10% for installations up to 2000m (6560ft). Additional 20% for installations 2000-3000m (6560–9840ft).
	Relative Humidity	95% Relative Humidity (non-condensing)

3.13 Certification

The following table lists the Q-Link VFD's certifications:

Certifications	**Agency Approvals**	UL, cUL
	Enclosure Rating	UL Type 1, Plenum-rated (UL508C), Available packaged as UL Type 12/IP54, UL Type 3R/IP54, UL Type 4X/IP66
	Keypad Rating	UL Type 1 (IP21)
	Harmonic Distortion	R^3 Filtering ≤ 35% at full load to address IEEE519 and EN50160

CHAPTER 4 - INSTALLATION AND WIRING

Refer to the flowchart pictured below (Figure 4.1.1) for proper installation of the Q-Link VFD.

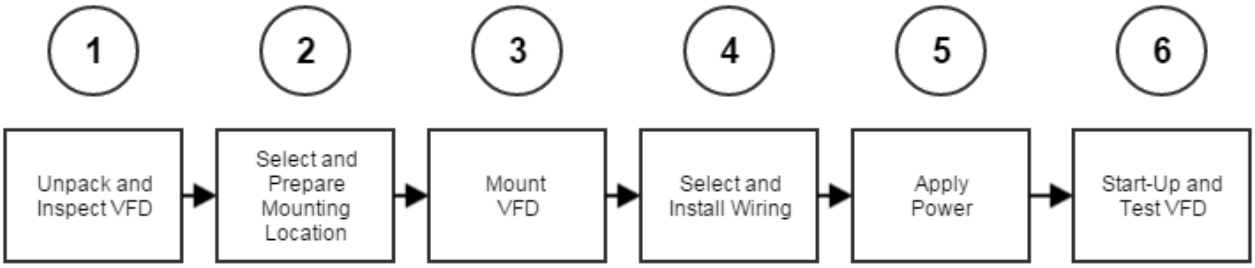

(Figure 4.1.1)

4.1 Installation and Precautions

Carefully review all installation warnings and instructions before proceeding.

- Handle VFD with care to prevent damage to the plastic components. Do not hold VFD by the front cover.
- Do not mount VFD on the equipment with excessive vibration above 5.9 m/sec^2.
- Install VFD in a location where temperature is within the permissible range 14~122°F (-10~50°C).
- Install it on a non-combustible surface because VFD generates heat during normal operation.
- Mount VFD vertically (top up) for proper heat dissipation. Provide sufficient clearance for an airflow around VFD. (see figure 4.1.1 below)

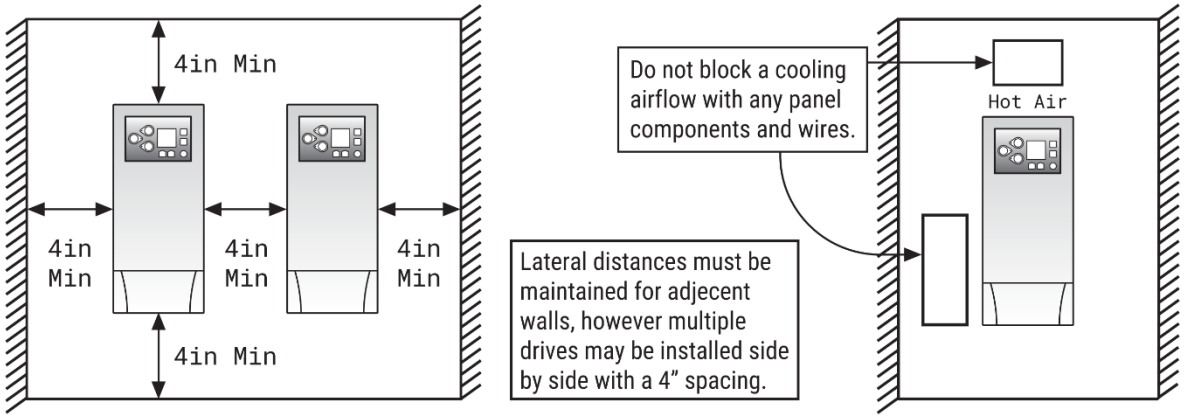

(Figure 4.1.1)

- Do not mount VFD in direct sunlight or near other heat sources.
- The VFD should be mounted in a Pollution Degree 2 environment. If VFD is going to be installed in an environment with a high probability of dust, metallic particles, mists, corrosive gas or other contaminants, the VFD must be mounted inside the appropriate electrical enclosure with proper NEMA, UL or IP rating and adequate cooling. If VFD is mounted inside an enclosure, please consult factory for ambient temperature considerations.
- Mount VFD using proper screws or bolts.
- When two or more VFDs are installed in a ventilated enclosure, the cooling system should provide adequate airflow for all the VFDs. Do not install VFD above another heat source (another VFD, inductive reactors, etc.) Refer to figure 4.1.2.

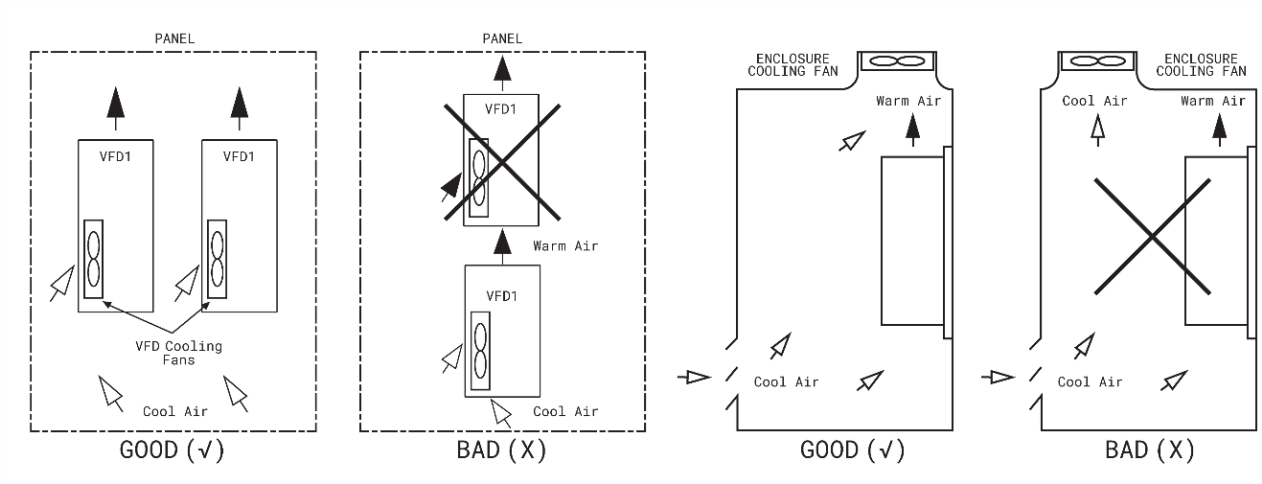

(Figure 4.1.2)

4.2 Conduit Guidelines

- Follow the conduit guidelines as shown in the figure below. Refer to Figure 4.2.1.

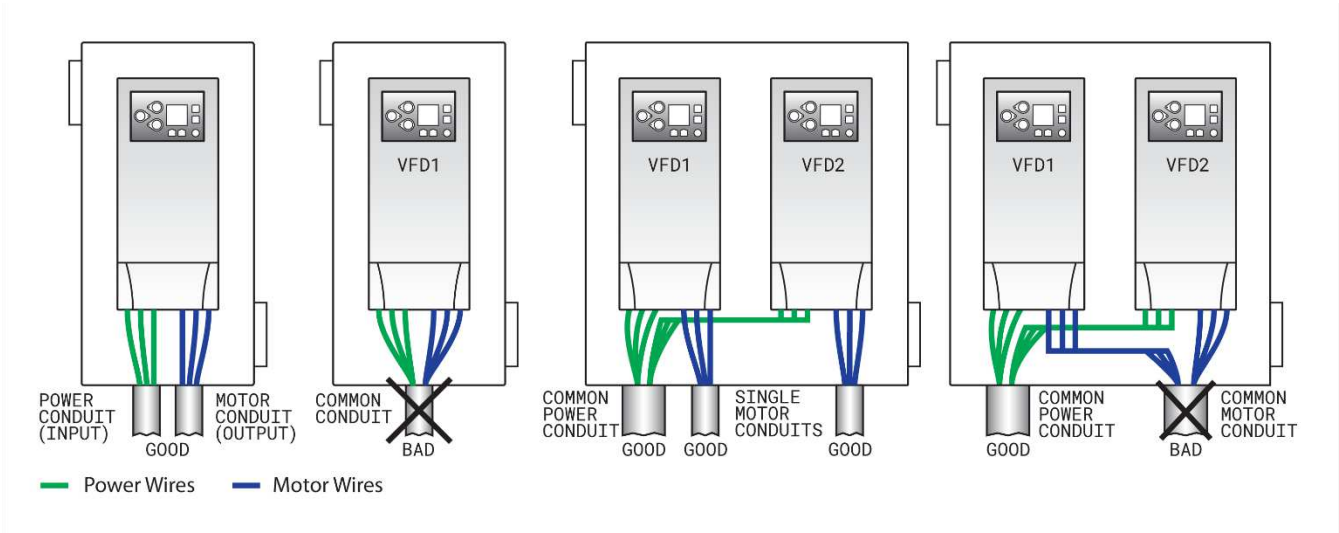

(Figure 4.2.1)

CAUTION

VFD can malfunction or be damaged if motor and power wires are in the same conduit or motor wires from two or more VFDs are in the same conduit.

4.3 Wiring Schematic – Standalone & HP-Rated VFD's

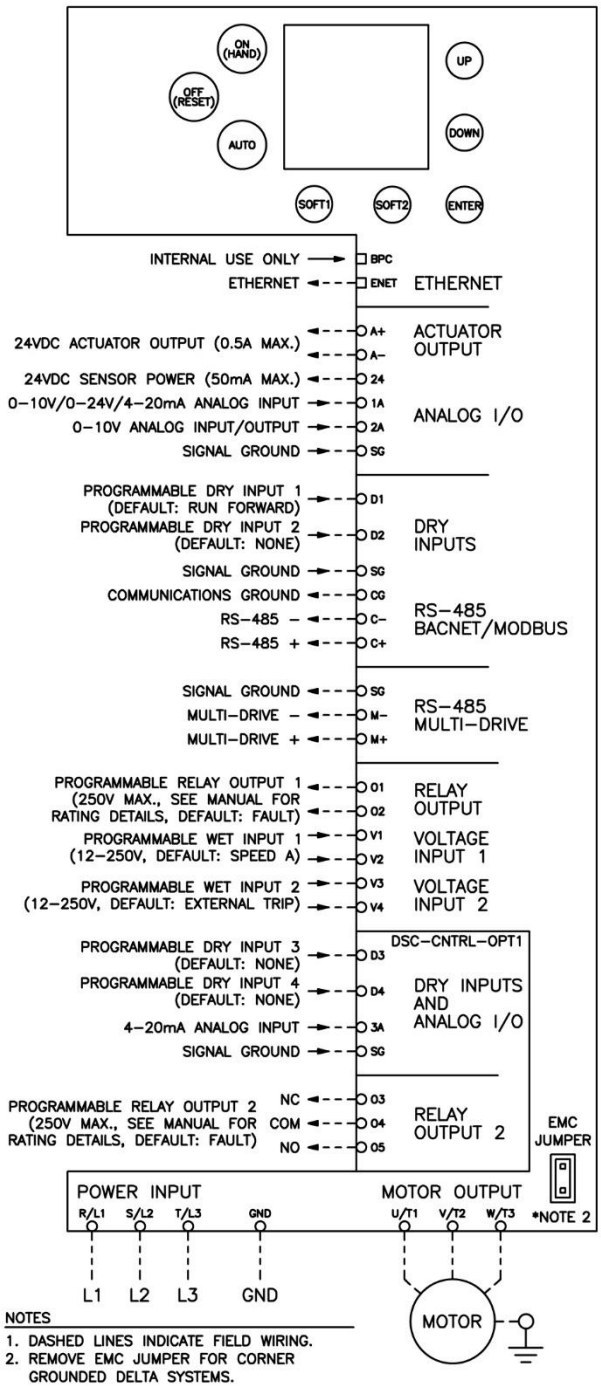

4.4 Wiring Schematic – Smart Bypass

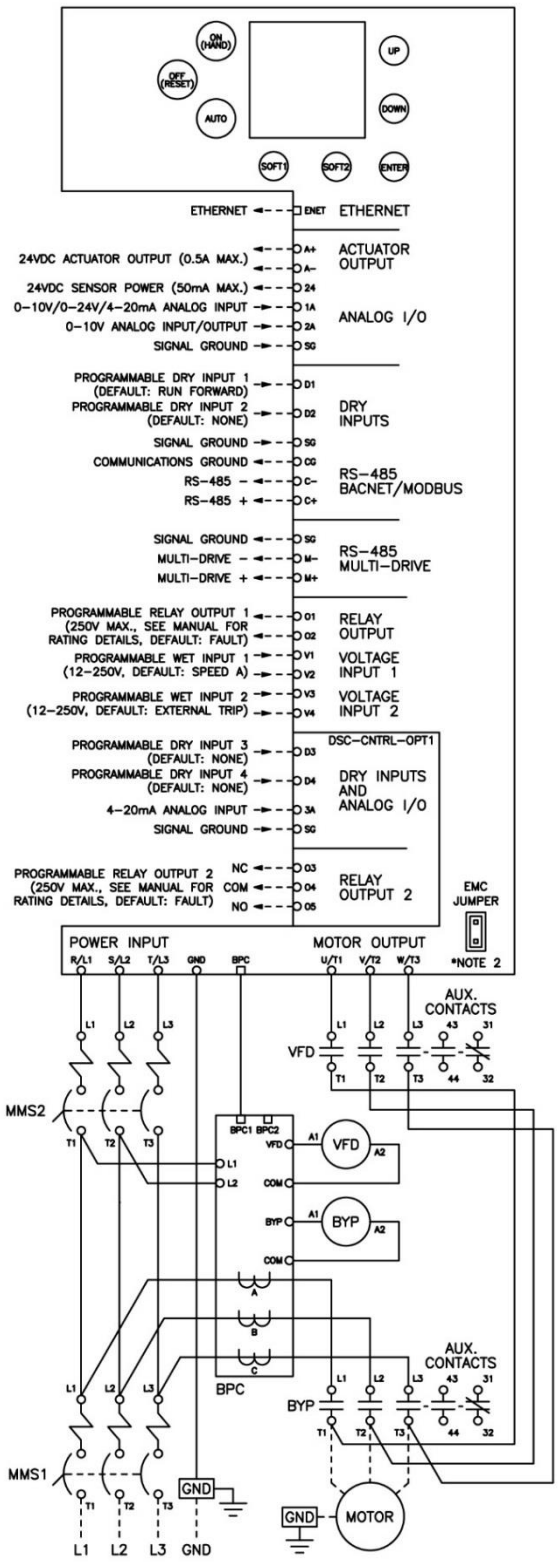

NOTES
1. DASHED LINES INDICATE FIELD WIRING.
2. REMOVE EMC JUMPER FOR CORNER GROUNDED DELTA SYSTEMS.

4.5 Wiring Schematic – VFD with Disconnect

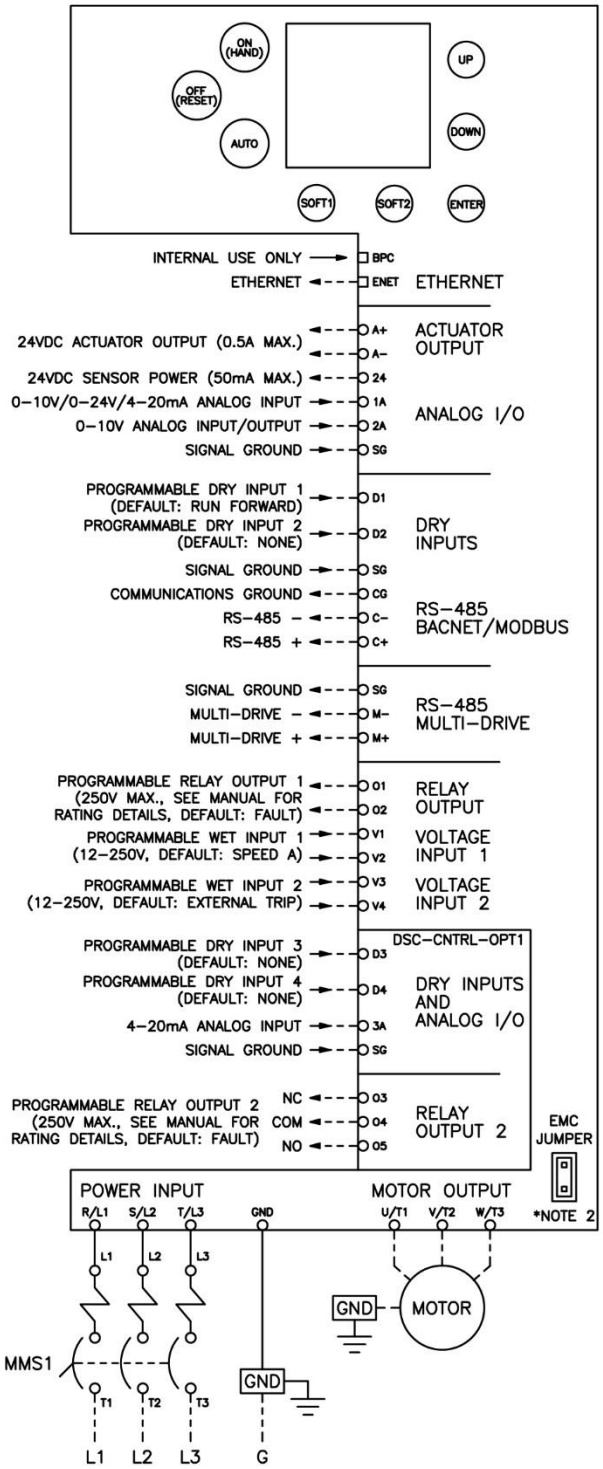

4.6 Power Wiring Recommendations

- The VFD provides the high-voltage and high-current connections for input power and output power. The input power is fused (3 phases) and filtered for EMC compliance.

	Name	Type	Description	Details
Input Power Terminals	R/L1	Terminal	Phase A Voltage Input	Use only copper conductors rated for at least 60°C and 600V. Tighten terminals to specified torques shown in torque table.
	S/L2	Terminal	Phase B Voltage Input	
	T/L3	Terminal	Phase C Voltage Input	
	GND	Terminal	Ground	
Motor Output Terminals	U/T1	Terminal	Phase A Motor Output	
	V/T2	Terminal	Phase B Motor Output	
	W/T3	Terminal	Phase C Motor Output	

- Do not connect input power to VFD Motor Terminals U/T1, V/T2, and W/T3 otherwise VFD can be damaged.
- Do not run input power and motor wires in the same conduit, otherwise the VFD can malfunction or be damaged. (See Figure 4.3.1)
- Do not run input power wires or motor leads for multiple VFDs in common conduit. (See Figure 4.3.1)
- Do not install power factor correction capacitors, surge suppressors, or RFI filters on the VFD output. These devices can trigger some VFD faults or even damage the VFD.
- Do not leave wire fragments, metal shavings or other metal objects inside the VFD, otherwise VFD can be damaged.
- Size power wire to maintain a voltage drop less than 2% at VFD or motor terminals.
- Install a load (output) reactor to protect motor windings if distance from 460V or 600V VFD to a motor is in the range 45-100 feet or output dV/dt filter for a range 100-1000 feet (800 feet for submersible pumps) or a sine wave filter for greater distances.

4.7 Grounding

- Ground VFD to the power source ground and motor ground to avoid electrical shock.
- Connect a dedicated ground wire from power transformer or power distribution panel to VFD ground terminal and dedicated ground wire from VFD to the motor for ground fault protection proper operation. If metal construction or conduits are used as ground leak current path, the VFD can have inadequate grounding and ground fault protection.
- Connect ground wire first before any other wires and only connect it to the dedicated ground terminal of the VFD. Do not use the case or the chassis assembly screws for grounding.
- VFD Grounding wire should be as short as possible.
- Do not install a ground rod at VFD package if it is not a service entrance rated panel, otherwise the VFD cannot provide proper ground fault protection or it can intermittently trip on Ground Fault.

4.8 Digital and Analog Control Circuit Terminal Layout

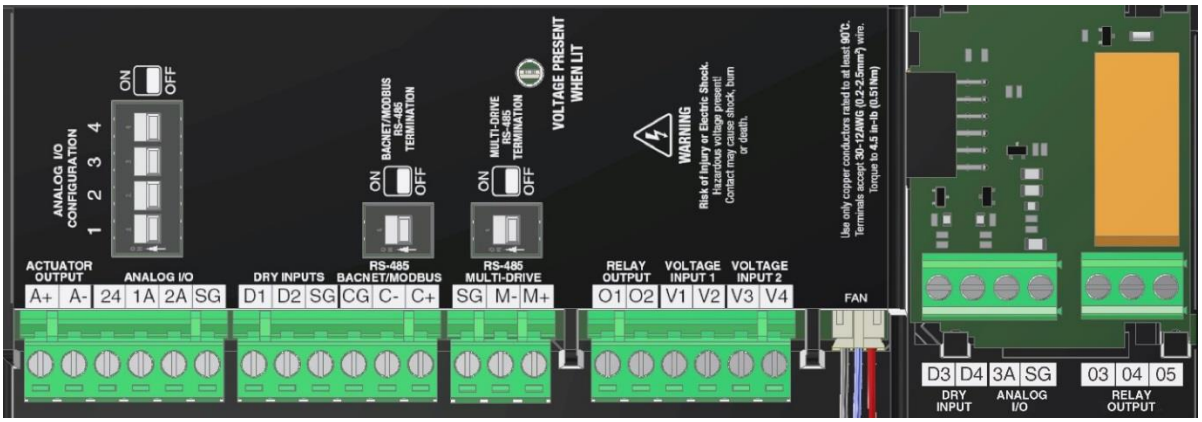

Description	Name	Type	Description	Details
Damper Output	**A+**	Terminal	24VDC Damper out V+ (positive)	24VDC Damper supply, 0.5A max
	A-	Terminal	24VDC Damper out V- (negative)	
Analog In/Out	**24**	Terminal	24VDC Control Power Output	24VDC supply capable of 50mA maximum. Analog PID reference or speed reference. Max Error allowed is 1% of Full Scale
	1A	Terminal	Input (0-10V / 0-24V / 4-20mA)	
	2A	Terminal	Configurable Input / Output 0-10V	
	SG	Terminal	Signal Ground	
Dry Input Terminals	**D1**	Terminal	Dry Input 1 default: Run/N.O.	Shutdown / Permissive / Fireman's Override / Limit Switch / Speed A / Speed B / None - SW configurable Internal 24VDC 3mA circuit.
	D2	Terminal	Dry Input 2 default: None/N.O.	
	SG	Terminal	Signal ground/Shield	
Communications	**CG**	Terminal	Communications Ground	RS-485 port for Modbus RTU and BACnet MS/TP Communications
	-	Terminal	-RS-485	
	+	Terminal	+RS-485	
	SG	Terminal	Signal Ground/Shield	Wiring for communication to multiple drives
	M-	Terminal	- RS-485	
	M+	Terminal	+ RS-485	
	E1	CAT5	Ethernet Port	Comm Port for Modbus IP and BACnet IP (Not pictured above – located below HOA buttons, on the left of the cooling fan cover)

Description	Name	Type	Description	Details
Relay Output Terminal	**O1**	Terminal	Default Selection: Fault/N.O.	Fault, Run and Proof of Run relay - SW Configurable (1.25A @ 125VAC, Max Switching Voltage 250VAC)
	O2	Terminal	Default Selection: Fault/N.O.	
Wet Input Terminals	**V1**	Terminal 1	Default Selection: Speed A/Active High (V)	Shutdown / Permissive / Fireman's Override / Limit Switch / Speed A / Speed B / None - SW configurable (Default N.O.) 12-240VAC/VDC, 5mA maximum
	V2	Terminal 1	Common 1	
	V3	Terminal 2	Wet Input 2 default: External Trip/Active High (V)	
	V4	Terminal 2	Common 2	
Cooling Fan	**Fan**	Connector	Fan Power Supply	Cooling fan for VFD (factory wired)
Dry Input Terminals	**D3**	Terminal	Dry Input 3 default: None	Shutdown / Permissive / Fireman's Override / Limit Switch / Speed A / Speed B / None - SW configurable (Default N.O.) 24VDC 3mA maximum
	D4	Terminal	Dry Input 4 default: None	
Analog I/O	**3A**	Terminal	Input (4–20mA)	Analog PID reference or speed reference. Max Error allowed is 1% of Full Scale
	SG	Terminal	Signal Ground/Shield	Signal Ground is shared between terminals D3/D4 and 3A
Relay Output 2	**03**	Terminal	Default Selection: Fault/N.C.	Fault, Run and Status relay - SW Configurable (1.25A @ 125VAC, Max Switching Voltage 250VAC)
	04	Terminal	Default Selection: Fault/COM	
	05	Terminal	Default Selection: Fault/N.O.	

- Analog Input (1A, SG) - The Analog Input mode is user selectable (0-10V, 0-24V or 4-20mA) based on status of DIP switches.
- Configurable Analog Input/Output (2A, SG) - The Analog Input/Output mode is user selectable (0-10V input, or output 0-10V or 4-20mA) via DIP switches. When configured as an input it only accepts an 0-10VDC input signal. As an output, it provides a programmable/variable voltage or current.
- Analog Input 3A is a dedicated 4-20mA input
- Wet Inputs (V1-V2, V3-V4) - Voltage Input accepts AC/DC voltages 12-240V± 10%, maximum current draw is 5mA. Inputs can be interchanged between N.O. and N.C. Default state is Active High when voltage is present (N.O.).
- Dry Inputs (D1, D2, D3, D4 SG) - Four Dry inputs with maximum current limit of 3mA are available. Inputs can be interchanged between N.O. and N.C. Default contact state is NO.
- Power Outputs –
    - (A+, A-) The Damper Power output will be activated as soon as an active run command from the VFD is initialized and provides 24V DC at 0.5A maximum. If a limit switch or a timer is used, the VFD will not output until the switch closes or timer expires.

(24, SG) The Control Power will output 24VDC at 50mA maximum. The Control Output will be activated whenever the VFD is powered up to provide controls to sensors

4.9 Signal Wiring

Transducer Wiring

0-10VDC Transducer: Wire from the transducer's positive (Power) wire to the VFD terminal marked **24**. Wire from the tranducer's output (Out) to VFD terminal marked **1A** or **2A.** Wire form the tranducer's common (Com) to the VFD terminal marked **SG** (Signal Ground). The shield wire should be connected to the ground lug on the VFD conduit plate.

4-20mA Transducer: Wire from the transducer's positive (Power) wire to the VFD terminal marked **24**. Wire from the tranducer's output (Out) to VFD terminal marked **1A** or **3A**. Wire form the tranducer's common (Com) to the VFD terminal marked **SG** (Signal Ground). The shield wire should be connected to the ground lug on the VFD conduit plate.

0-10VDC signal from Transducer

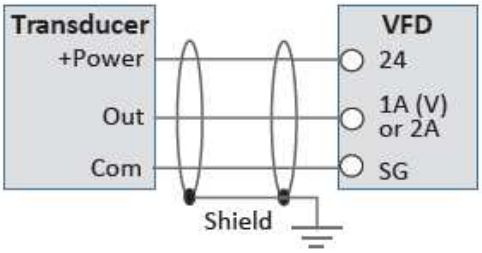

4-20mA signal from Transducer

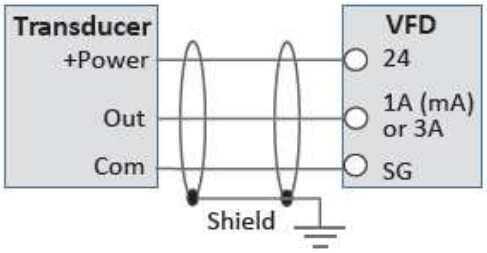

BMS Control Wiring

0-10VDC BMS: Wire from the BMS Output (Out) to the VFD terminal marked **1A** or **2A**. Wire from the BMS Common (Com) to VFD terminal marked **SG** (Signal Ground). The shield wire should be connected to the ground lug on the VFD conduit plate.

4-20mA BMS: Wire from the BMS Output (Out) to the VFD terminal marked **1A** or **3A**. Wire from the BMS Common (Com) to VFD terminal marked **SG** (Signal Ground). The shield wire should be connected to the ground lug on the VFD conduit plate.

0-10VDC signal from BMS

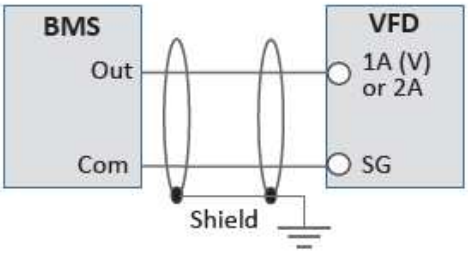

4-20mA signal from BMS

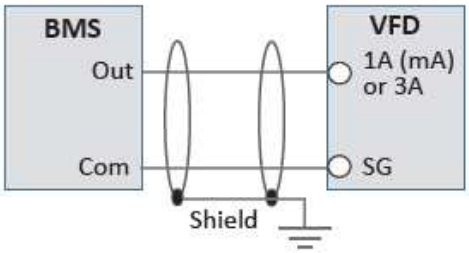

4.10 Analog DIP Switch Configurations

The analog I/O configuration DIP switches 1 through 4 can be found to the right of the analog I/O terminals. DIP switches must be configured per the illustrations below to operate as desired.

1A - ANALOG INPUT
SWITCHES 3 & 4

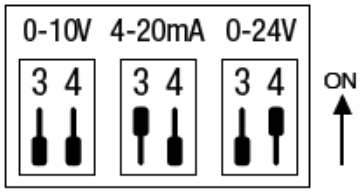

2A - ANALOG INPUT/OUTPUT
SWITCHES 1 & 2

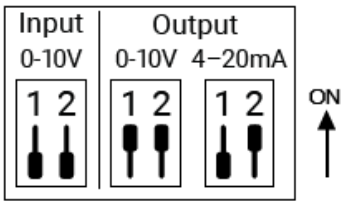

4.11 Bypass Controller DIP Switch Configurations

The Bypass Controller (BPC) DIP switches can be found on the upper left of the unit BPC, present only in the Q-Link Smart Bypass packages. The default position for both switches is OFF. The BPC module functions can be enabled by moving the desired switch inward (right) toward the center of the module (see image below).

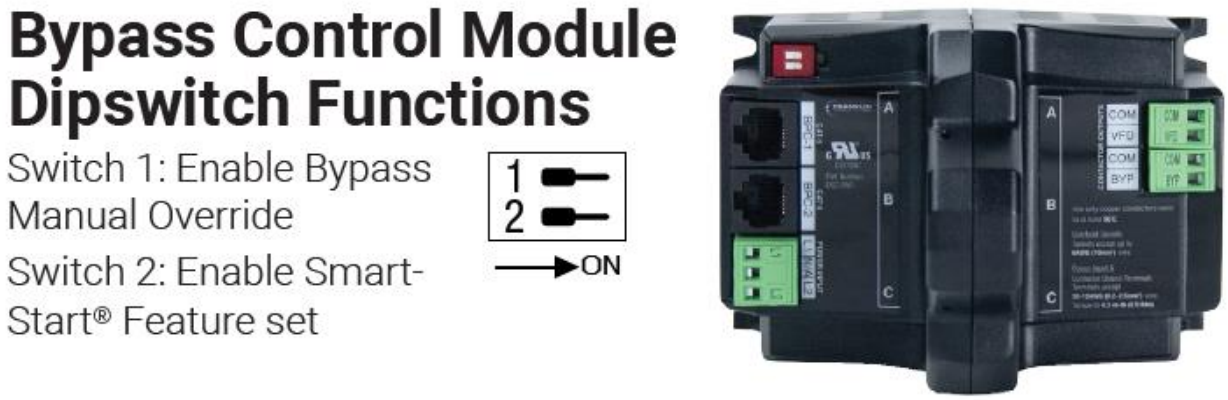

CHAPTER 5 - OPERATION

CHAPTER 5 - OPERATION

5.1 Control Interface

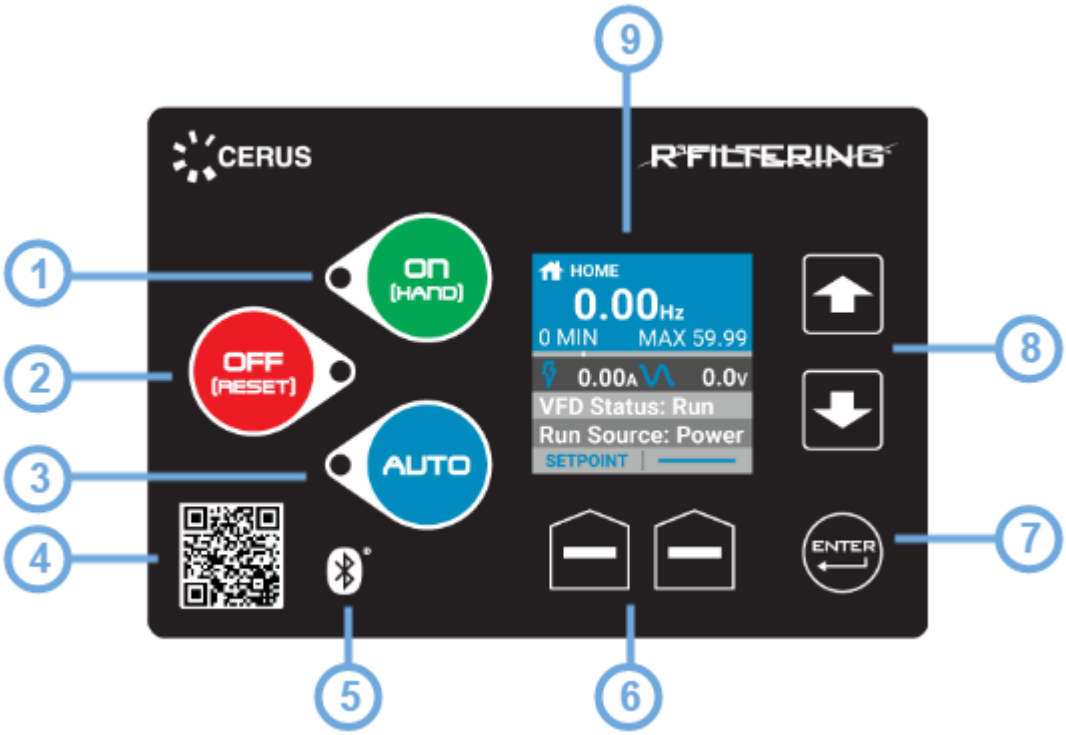

1. **On (Hand) [Hand Mode]:** Commands the drive to run at a preset (user specified) frequency.
2. **Off (Reset):** During normal operating mode this button will stop the drive. During a fault condition, this button is used to reset and clear a fault when depressed for 3-5 seconds.
3. **Auto [Automatic Mode]:** This button is used to run the drive based on user defined remote commands, such as external sensors or BMS. When in "Auto Mode" the drive will only start or stop based on these user-configured remote commands.
4. **Bluetooth Quick Response (QR) Code [Quick Connect]:** Scanning QR code using the Q-Link mobile application allows for instant access to VFD.
5. **Bluetooth Connection (Device Pairing Available):** Indicates that the VFD is capable of supporting a Bluetooth connection.
6. **Soft Keys:** These keys correspond to the bottom left and right corners of the screen and will change according to current menu and function. *On Bypass packages, the soft keys are used to switch between "VFD" and "Bypass" by selecting the desired mode (See section 5.4.1 for overview of the home screen).*
7. **Enter:** Executes menu selection and to confirm any changes made to parameter settings. Also, allows user to access submenus and selected parameters.
8. **Up and Down Arrows [Menu Select]:** Use to navigate menus and adjust parameters.
9. **Organic Light-Emitting Diode (OLED) Display:** Displays status and menu items. The VFD defaults to the home screen and displays status indicators upon activation.

5.2 Control Interface

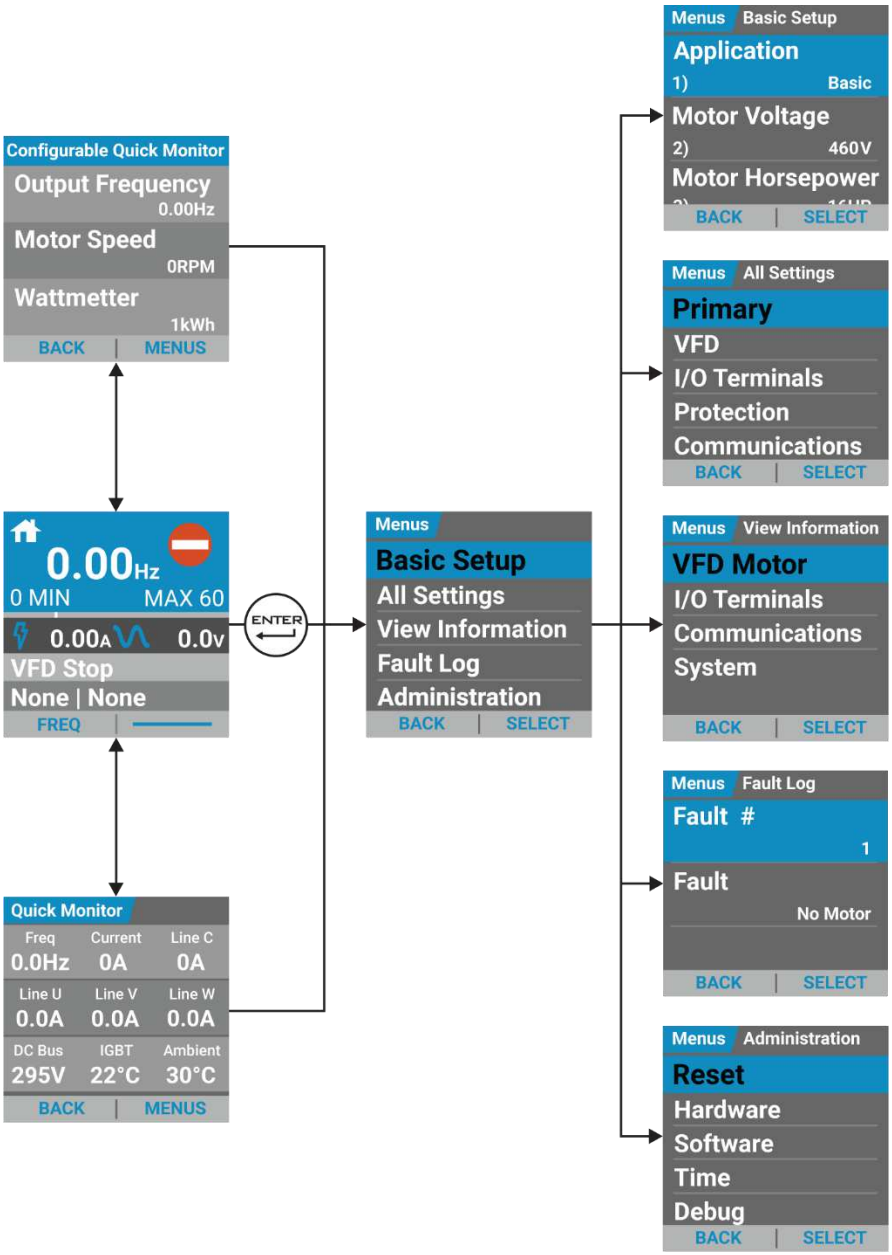

Basic Setup Submenus

1) Application
2) Motor Voltage
3) Motor Horsepower
4) Motor Current
5) Motor RPM
9) High Frequency
10) Low Frequency
34) Acceleration
35) Deceleration
42) Auto Speed Reference
53) Feedback Max
54) Keypad Setpoint
58) PID High Freq
59) Low Freq

All Settings Submenus

Primary
VFD
I/O Terminals
Protection
Communications

View Info Submenus

VFD/Motor
I/O Terminals
Communications
System

Fault Log Submenus

Fault #
Fault

Admin. Submenus

Reset
Hardware
Software
Time
Debug

5.3 Basic Startup

During initial power-up, the VFD will show the message [Initializing VFD] and the HOA will be locked in the OFF position. At minimum, parameters BASIC-01 through BASIC-09 should be set prior to starting the VFD. To access the Basic Parameter group from the Home screen press 'Enter' to access 'Menus' and 'Enter' once more to select 'Basic Setup,' see below:

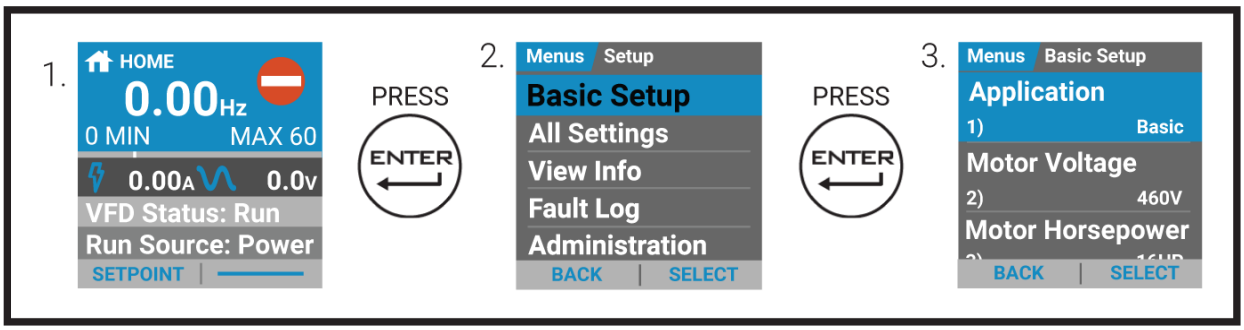

Step 1: Select Application [Basic-01]

Select [BASIC] application if VFD is controlled by BMS, or select another application [Exhaust Fan, Supply Fan, Etc] if it is wired to a pressure transducer. Refer to the parameter table at the end of this quick-start for presets.

Step 2: Enter Rated Motor Voltage [Basic-02]

Enter the rated voltage of the motor from the motor nameplate.

Step 3: Enter Rated Motor HP [Basic-03]

Enter the motor horsepower rating from the motor nameplate.

Step 4: Enter Rated Motor Current [Basic-04]

Enter the motor FLA (Full Load Amps) rating from the motor nameplate.

Step 5: Enter Rated Motor RPM [Basic-05]

Enter the rated speed of the motor from the motor nameplate.

Step 6: Set the High Frequency Limit [Basic-09]

Enter the high frequency limit that the drive will allow during operation.

Basic Parameters 10–22 should be verified and changed if necessary to ensure desired operation.

5.4 Main Menu Displays

5.4.1 Home Screen

The “HOME” screen displays horizontal rows, each containing information regarding the immediate status of the VFD.	
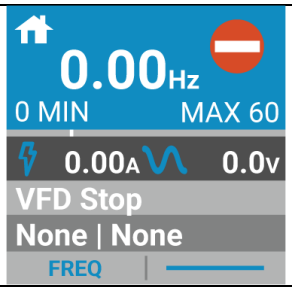	The home screen rows from top to bottom display: • Motor Frequency • Motor Current • Output Voltage • VFD status • Run Source
SmartBypass Home Screen When in VFD Mode (Normal Operation) 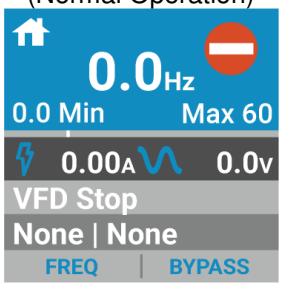 When in Bypass Mode 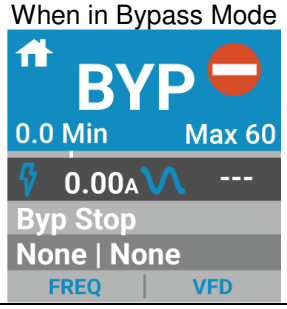	On bypass packages, the right soft key is used to switch between VFD and Bypass mode. When the bypass package is in VFD mode (normal operation), the right soft key will display “Bypass.” To enter into bypass mode, press the bypass button. Once in bypass mode the screen will indicate “BYP” in place of the drive speed, as it will now be operating across the line (60Hz) when run command is received. Status will also ready “BYP Stop” or “BYP Run” when in bypass mode. To switch back into VFD mode, press the right soft key that indicates “VFD”.

5.4.2 Setpoint Screen

	The “Setpoint” screen is used to change the motor “Motor Frequency Setpoint Value.” Use the right soft key labeled “Select” to shift the cursor to the desired character. Use the up/down arrow keys to change the value. Select, “BACK” to exit this setting.

5.4.3 Quick Monitor Screen

The “Quick Monitor” screen displays four horizontal rows.

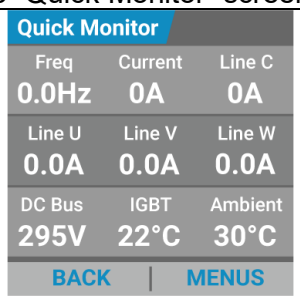

The first three rows contain information relating to:

- Phase A Motor Current
- Phase B Motor Current
- Phase C Motor Current
- Average Motor Current
- DC Bus Voltage
- Output Voltage
- Kilowatt Hours
- IGBT Inverter Temperature
- Ambient Temperature

The bottom row allows for back navigation to the home screen and entry to the submenus.

The indicators displayed on the Quick Monitor screen are defaults and cannot be changed. A separate “Configurable Quick Monitor” allows the user to select desired values to monitor (see section 5.4.4 below).

5.4.4 Configurable Quick Monitor Screen

The “Configurable Quick Monitor” screen displays four horizontal rows.

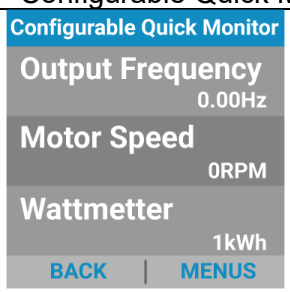

The first three rows display up to three user configurable values.

A user can modify what appears on the display screen by pressing "ENTER" and then using the arrow keys to move up or down and press "ENTER" again to select which of the three items they would like to change. Upon depressing “ENTER” another submenu will appear displaying three of the possible twenty-one display item options. Use the arrow keys to scroll through the submenu list of items and then depress the “ENTER” key to choose what you would like to display.

Available values are:

Output Frequency	Lined W Current	D1-SG Input
Motor Speed	DC Bus Voltage	D2-SG Input
Wattmeter	Output Voltage	V1-V2 Input
Average Power	HOA Mode	V3-V4 Input
Average Current	IGBT Temp	01-02 Output
Line U Current	Ambient Temp	1A Input
Line V Current	Motor Run Time	2A Output

CHAPTER 6 - Q-LINK iOS & ANDROID MOBILE APPLICATION

The Q-Link Companion App can be downloaded from either the Apple App Store™ or the Google PlayStore™.

6.1 Setup Bluetooth Connection

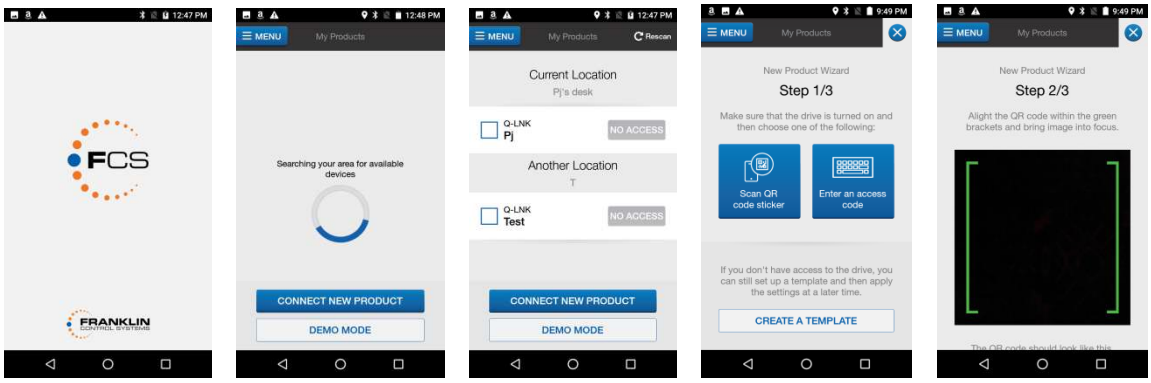

- From the Home screen, tap “Connect New Product.”
- On the My Products screen, tap either “Scan QR Code Sticker” or “Enter an Access Code.”
- A QR code targeting screen will appear upon tapping “Scan QR Code Sticker.”
- Once the QR code is acquired and verified a new VFD item is added to the “Location” list on the home screen.

6.2 Setup VFD

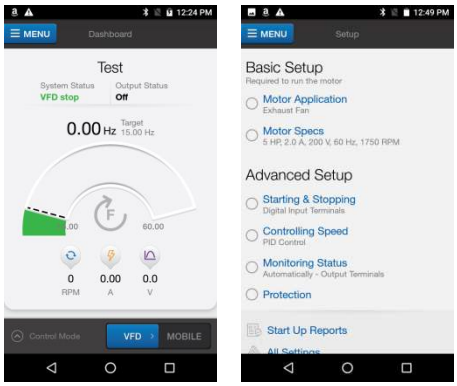

- On the ‘My Products’ screen, tap “Q-Link <*Name*>” to connect to the device and enter the Dashboard
- Tap on drop-down “MENU” button located on the top-left of the display screen then press “Setup”.
- Choose options under “Basic Setup” or “Advanced Setup” to change VFD settings.

CHAPTER 7 - PARAMETER LISTS

7.1 Primary Parameter Group

Code	Modbus Address	Full Parameter Name	OLED Display Name	Parameter Setting Range	Adj. During Run
1	101	Application	Application	0- Basic 1- Supply Fan 2- Exhaust Fan 3- Cooling Tower 4- Surface/Booster Pump	No
2	102	Rated Motor Voltage	Motor Voltage	200/400V model: 200 to 480V; default 230V 400V model: 380 to 480V; default 460V	No
3	103	Rated Motor HP	Motor Horsepower	1 to 20HP	No
4	104	Rated Motor Current	Motor Current	0.5A to VFD Rating	No
5	105	Rated Motor RPM	Motor RPM	500 to 3600 RPM	No
6	106	Power Line Frequency	Line Frequency	0- 50 [Hz] 1- 60 [Hz]	No
7	107	Maximum Frequency	Max Frequency	30.00 to 240.00 [Hz]	No
8	108	Base Frequency	Base Frequency	30.00 to VFD Max Hz [Primary-07]	No
9	109	High Frequency Limit	High Frequency Limit	VFD Low Hz Limit [Primary-10] to VFD Max Hz [Primary-07]	No
10	110	Low Frequency Limit	Low Frequency Limit	0.50 to VFD High Hz Limit [Primary 10]	Yes
11	111	Carrier Frequency	Carrier Frequency	2.0 to 10.0 [kHz]	No
15	115	Power-On Run	Power-On Run	0 - Disable 1 - Enable	Yes
16	116	Power-On Run Delay	Power-On Run Delay	0 to 9999 [Sec]	Yes

Code	Modbus Address	Full Parameter Name	OLED Display Name	Parameter Setting Range	Adj. During Run
17	117	Run after Fault Reset	Fault Reset & Run	0 - Disable 1 - Enable	Yes
18	118	Torque Boost	Torque Boost	0 - Disable 1 - Enable	No
19	119	Torque Boost Level	Torque Boost Level	0.00 to 15.00	No
20	120	Start Mode	Start Mode	0 - Accelerate 1 - DC Start 2 - Flying Start	No
21	121	DC Start Level *	DC Start Level	0 - Low 1 - Medium 2 - High	No
22	122	HOA Type	HOA Type	0 - Keypad HOA 1 - Auto Only 2 - Keypad Off/Auto 3 - External HOA	No
23	123	Run Command in Hand	Hand Run Cmd	0 – Always Run 1 - Terminal 2 - 3-Wire 3 - Comms	No
24	124	Speed Reference in Hand	Hand Speed Ref	0 - Keypad 1 - 1A Analog Input 2 - 2A Analog Input 3 - Communications 4 - 3A Analog Input	No
30	130	Stop Mode	Stop Mode	0 - Decel 1 - Coast	No
31	131	DC Braking Start Frequency	DC Braking Start Frequency	1.0 to 60.0 [Hz]	No
32	132	DC Braking Current	DC Braking Current	1 to 100 [%]	No
33	133	DC Braking Time	DC Braking Time	1.0 to 60.0 [Sec]	No
34	134	Acceleration Time	Acceleration Time	1.0 to 6000.0 [Sec]	Yes
35	135	Deceleration Time	Deceleration Time	1.0 to 6000.0 [Sec]	Yes
36	136	V/F Control Mode	V/F Control	0 - Linear 1 - Squared	No
41	141	Run Command in Auto	Auto Run Cmd	0 – Always Run 1 - Terminal 2 - 3-Wire 3 - Comms	No
42	142	Speed Reference in Auto	Auto Speed Ref	0 - Keypad 1 - 1A Analog Input 2 - 2A Analog Input 3- Comms 4 - PID 5 - 3A Input	No

Code	Modbus Address	Full Parameter Name	OLED Display Name	Parameter Setting Range	Adj. During Run
43	143	Reference Loss Condition	Anlg Ref Loss	0 - Disabled 1 - Below 1/2 of Min 2 - Below Min	No
44	144	Ref. Loss Action	Anlg Ref Loss Act	0 - Fault 1 - Stop (uses selected stop mode) 2 - Hold Speed	No
45	145	Ref. Loss Delay	Anlg Ref Loss	0 to 20 [Sec]	No
46	146	PID Mode Select	PID Mode	0 - Direct 1 - Inverse	No
47	147	PID Setpoint Source	Setpoint Source	0 - Keypad 1 - 1A Analog Input 2 - 2A Analog Input 3 - Comms 4 - 3A Input	No
48	148	PID Feedback Source	Feedback Source	0 - 1A Input 1 - 2A Input 2 - 3A Input	No
49	149	PID Feedback Unit	Feedback Units	0 – PSI (0.1) 1 – GPM (0.1) 2 – inWC (0.01) 3 – CFM (0.1) 4 – inHg (0.1) 5 – Feet (0.1) 6 - °F (0.1) 7 – mBar (0.01) 8 – Pa (0.1) 9 – kPa (0.01) 10 – Meters (0.1) 11 - °C (0.1) 12 – Custom (0.1) 13 - % (0.1)	No
50	150	PID Feedback Max	Feedback Max	0.0 to 6000.0 [Unit]	No
52	152	PID Set-point value	Keypad Setpoint	0.0 to 95% of [PID F/B Max]	No
55	155	PID P-Gain	P Gain	0 to 999 [%]	Yes
56	156	PID I-Gain	I Gain	0.1 to 32.0 [Sec]	Yes
57	157	PID Out Ramp Time	PID Ramp Time	0.0 to 10.0 [Sec]	Yes
58	158	PID High Frequency Limit	PID High Freq Limit	[Prime-59] to [Prime-07] [Hz]	No
59	159	PID Low Frequency Limit	PID Low Freq Limit	0.00 to [Prime-58] [Hz]	Yes
60	160	Feedback Signal Loss	Fdbk Loss	0 - Disabled 1 - Below 1/2 of Min 2 - Below Min	No

Code	Modbus Address	Full Parameter Name	OLED Display Name	Parameter Setting Range	Adj. During Run
61	161	Feedback Loss Action	Fdbk Loss Action	0 - Fault 1 - Stop (uses selected stop mode) 2 - Hold Speed	No
62	162	Feedback Loss Delay	Fdbk Loss Delay	0 to 10 [Sec]	No

Primary Group Application Defaults

Code	OLED Display Name	Basic	Supply Fan	Exhaust Fan	Cooling Tower	Surface/ Booster Pump
2	Motor Voltage	200V / 575V	200V / 575V	200V / 575V	200V / 575V	200V / 575V
3	Motor Horsepower	By VFD Rating & Line Voltage	By VFD Rating & Line Voltage	By VFD Rating & Line Voltage	By VFD Rating & Line Voltage	By VFD Rating & Line Voltage
4	Motor Current	By UL Table by Line Hz & Voltage and VFD Rating	By UL Table by Line Hz & Voltage and VFD Rating	By UL Table by Line Hz & Voltage and VFD Rating	By UL Table by Line Hz & Voltage and VFD Rating	By UL Table by Line Hz & Voltage and VFD Rating
5	Motor RPM	1750 [RPM]	1750 [RPM]	1750 [RPM]	1750 [RPM]	1750 [RPM]
6	Line Frequency	1- 60 [Hz]	1- 60 [Hz]	1- 60 [Hz]	1- 60 [Hz]	1- 60 [Hz]
7	Max Frequency	60.00 [Hz]	60.00 [Hz]	60.00 [Hz]	60.00 [Hz]	60.00 [Hz]
8	Base Frequency	60.00 [Hz]	60.00 [Hz]	60.00 [Hz]	60.00 [Hz]	60.00 [Hz]
9	High Frequency Limit	60.00 [Hz]	60.00 [Hz]	60.00 [Hz]	60.00 [Hz]	60.00 [Hz]
10	Low Frequency Limit	15.00 [Hz]	15.00 [Hz]	15.00 [Hz]	15.00 [Hz]	20.00 [Hz]
11	Carrier Frequency	2.5 [kHz]	2.5 [kHz]	2.5 [kHz]	2.5 [kHz]	2.5 [kHz]
15	Power-On Run	1- Enable	1- Enable	1- Enable	1- Enable	1- Enable
16	Power-On Run Delay	5 [Sec]	5 [Sec]	5 [Sec]	5 [Sec]	5 [Sec]
17	Fault Reset & Run	1- Enable	1- Enable	1- Enable	1- Enable	1- Enable
18	Torque Boost	0- Disable	0- Disable	0- Disable	0- Disable	0- Disable
19	Torque Boost Level	2.00	2.00	2.00	2.00	2.00
20	Start Mode	2- Flying start	2- Flying start	2- Flying start	2- Flying start	0- Accel
21	DC Start Level	0- Low	1- Medium	1- Medium	1- Medium	0- Low
22	HOA Type	0- Keypad HOA	0- Keypad HOA	0- Keypad HOA	0- Keypad HOA	0- Keypad HOA

Code	OLED Display Name	Basic	Supply Fan	Exhaust Fan	Cooling Tower	Surface/ Booster Pump
23	Hand Run Cmd	0- HOA in Hand	0- HOA in Hand	0- HOA in Hand	0- HOA in Hand	0- HOA in Hand
24	Hand Speed Ref	0- Keypad	0- Keypad	0- Keypad	0- Keypad	0- Keypad
30	Stop Mode	1(Coast)	1(Coast)	1(Coast)	1(Coast)	1(Coast)
31	Stop Mode	10 [Hz]	10 [Hz]	10 [Hz]	10 [Hz]	10 [Hz]
32	DC Braking Start Frequency	50 [%]	50 [%]	50 [%]	50 [%]	50 [%]
33	DC Braking Current	5.0 [sec]	5.0 [sec]	5.0 [sec]	5.0 [sec]	5.0 [sec]
34	Acceleration Time	30.0 [sec]	30.0 [sec]	30.0 [sec]	30.0 [sec]	20.0 [sec]
35	Deceleration Time	40.0 [sec]	40.0 [sec]	40.0 [sec]	40.0 [sec]	30.0 [sec]
36	V/F Control	0 (Linear)	1 (Squared)	1 (Squared)	1 (Squared)	0 (Linear)
39	Speed-Search Voltage Gain	100%	100%	100%	100%	100%
40	Speed-Search Speed Offset	5.0 [Hz]	5.0 [Hz]	5.0 [Hz]	5.0 [Hz]	5.0 [Hz]
41	Auto Run Cmd	(1) Terminal	(1) Terminal	(1) Terminal	(1) Terminal	(1) Terminal
42	Auto Speed Ref	(1) 1A Input	(4) PID	(4) PID	(4) PID	(4) PID
43	Anlg Ref Loss	(0) Disabled	(1) Half of Min	(1) Half of Min	(1) Half of Min	(1) Half of Min
44	Anlg Ref Loss Act	(0) Fault	(1) Stop	(1) Stop	(2) Hold	(1) Stop
45	Anlg Ref Loss	1 [Sec]	1 [Sec]	1 [Sec]	1 [Sec]	1 [Sec]
46	PID Mode	(0) Direct	(0) Direct	(1) Inverse	(1) Inverse	(0) Direct
47	Setpoint Source	(0) Keypad	(0) Keypad	(0) Keypad	(0) Keypad	(0) Keypad
48	Feedback Source	(0) 1A Input	(0) 1A Input	(0) 1A Input	(0) 1A Input	(0) 1A Input
49	Feedback Units	(0) PSI	(2) inWC	(2) inWC	(6) °F	(0) PSI
50	Feedback Max	100.00 [PSI]	10.00 [inWC]	10.00 [inWC]	150.00 [°F]	100.00 [PSI]
52	Keypad Setpoint	60.00 [PSI]	1.00 [inWC]	1.00 [inWC]	78.00 [°F]	60.00 [PSI]
55	P Gain	30 [%]	10 [%]	10 [%]	10 [%]	30 [%]
56	I Gain	1.0 [sec]	1.0 [sec]	1.0 [sec]	1.0 [sec]	0.5 [sec]
57	PID Ramp Time	0.0 [sec]	0.0 [sec]	0.0 [sec]	0.0 [sec]	0.0 [sec]
58	PID High Freq Limit	60.00 [Hz]	60.00 [Hz]	60.00 [Hz]	60.00 [Hz]	60.00 [Hz]
59	PID Low Freq Limit	20.00 [Hz]	15.00 [Hz]	15.00 [Hz]	15.00 [Hz]	20.00 [Hz]
60	Fdbk Loss	(1) Half of Min	(1) Half of Min	(1) Half of Min	(1) Half of Min	(1) Half of Min
61	Fdbk Loss Action	(1) Stop	(1) Stop	(1) Stop	(2) Hold	(1) Stop
62	Fdbk Loss Delay	1 [Sec]	1 [Sec]	1 [Sec]	1 [Sec]	1 [Sec]

7.2 VFD Parameter Group

Code	Modbus Address	Full Parameter Name	OLED Display Name	Parameter Setting Range	Adj. During Run
4	204	Auto Bypass Selection	Auto Bypass	0 - Disabled 1 - On VFD Fault 2 - Bypass Comms Loss 3 - VFD Fault & Bypass Comms Loss	No
6	206	Damper	Damper Control	0 - Disabled 1 - Damper*	No
7	207	Damper	Damper Delay	0 to 6000 [Sec]	Yes
10	210	Skip Frequency 1 Selection	Skip Freq 1 Enable	0 - Disabled 1 - Enabled*	No
11	211	Skip Frequency 1 Low*	Skip Freq 1 Low	0.50 to [Skip-1 High Hz]	Yes
12	212	Skip Frequency 1 High*	Skip Freq 1 High	[Skip-1 Low Hz] to [VFD Max Hz]	Yes
13	213	Skip Frequency 2 Selection	Skip Freq 2 Enable	0 - Disabled 1 - Enabled	No
14	214	Skip Frequency 2 Low*	Skip Freq 2 Low	0.50 to [Skip-2 High Hz]	Yes
15	215	Skip Frequency 2 High*	Skip Freq 2 High	[Skip-2 Low Hz] to [VFD Max Hz]	Yes
16	216	Skip Frequency 3 Selection	Skip Freq 3 Enable	0 - Disabled 1 - Enabled	No
17	217	Skip Frequency 3 Low *	Skip Freq 3 Low	0.50 to [Skip-3 High Hz]	Yes
18	218	Skip Frequency 3 High *	Skip Freq 3 High	[Skip-3 Low Hz] to [VFD Max Hz]	Yes
19	219	Preset Frequency-A	Speed A	VFD Low Hz Limit to VFD Max Hz	Yes
20	220	Preset Frequency-B	Speed B	VFD Low Hz Limit to VFD Max Hz	Yes
21	221	Preset Frequency-AB	Speed AB	VFD Low Hz Limit to VFD Max Hz	Yes
22	222	Preset Setpoint-A	Setpoint A	0.00 to F/B Max Value*0.95 [Unit]	Yes
23	223	Preset Setpoint-B	Setpoint B	0.00 to F/B Max Value*0.95 [Unit]	Yes
24	224	Preset Setpoint-AB	Setpoint AB	0.00 to F/B Max Value*0.95 [Unit]	Yes

Code	Modbus Address	Full Parameter Name	OLED Display Name	Parameter Setting Range	Adj. During Run
39	239	Reset User Settings		0 - No 1 - Factory Defaults	No
40	240	Custom Param 1		0 - Output Frequency 1 - Motor Speed (RPM) 2 - Energy Usage 3 - Average Power 4 - Average Current 5 - Line A Current 6 - Line B Current 7 - Line C Current 8 - DC Bus Voltage 9 - Output Voltage 10 - HOA Mode 11 - IGBT Temp 12 - Ambient Temp 13 - Motor Run Time 14 - D1-SG Input 15 - D2-SG Input 16 - V1-V2 Input 17 - V3-V4 Input 18 - O1-O2 Output 19 - 1A mA Input 20 - 1A V Input 21 - 2A Input 22 - 2A mA Output 23 - 2A V Output	Yes
41	241	Custom Param 2		same as VFD-41	Yes
42	242	Custom Param 3		same as VFD-41	Yes

VFD Group Application Defaults

Code	OLED Display Name	Basic	Supply Fan	Exhaust Fan	Cooling Tower	Surface/ Booster Pump
4	Auto Bypass	(0) Disabled	(0) Disabled	(0) Disabled	(0) Disabled	(0) Disabled
6	Damper Control	(0) Disabled	(0) Disabled	(0) Disabled	(0) Disabled	(0) Disabled
7	Damper Delay	120 [sec]	120 [sec]	120 [sec]	120 [sec]	120 [sec]
10	Skip Freq 1 Enable	(0) Disabled	(0) Disabled	(0) Disabled	(0) Disabled	(0) Disabled
11	Skip Freq 1 Low	23.00 [Hz]	23.00 [Hz]	23.00 [Hz]	23.00 [Hz]	23.00 [Hz]
12	Skip Freq 1 High	26.00 [Hz]	26.00 [Hz]	26.00 [Hz]	26.00 [Hz]	26.00 [Hz]
13	Skip Freq 2 Enable	(0) Disabled	(0) Disabled	(0) Disabled	(0) Disabled	(0) Disabled
14	Skip Freq 2 Low	33.00 [Hz]	33.00 [Hz]	33.00 [Hz]	33.00 [Hz]	33.00 [Hz]
15	Skip Freq 2 High	36.00 [Hz]	36.00 [Hz]	36.00 [Hz]	36.00 [Hz]	36.00 [Hz]
16	Skip Freq 3 Enable	(0) Disabled	(0) Disabled	(0) Disabled	(0) Disabled	(0) Disabled
17	Skip Freq 3 Low	43.00 [Hz]	43.00 [Hz]	43.00 [Hz]	43.00 [Hz]	43.00 [Hz]
18	Skip Freq 3 High	46.00 [Hz]	46.00 [Hz]	46.00 [Hz]	46.00 [Hz]	46.00 [Hz]
19	Speed A	30.00 [Hz]	30.00 [Hz]	30.00 [Hz]	30.00 [Hz]	30.00 [Hz]
20	Speed B	35.00 [Hz]	35.00 [Hz]	35.00 [Hz]	35.00 [Hz]	35.00 [Hz]
21	Speed AB	40.00 [Hz]	40.00 [Hz]	40.00 [Hz]	40.00 [Hz]	40.00 [Hz]
22	Setpoint A	50.0 [PSI]	1.10 [inWC]	1.10 [inWC]	75.5 [°F]	50.0 [PSI]
23	Setpoint B	55.0 [PSI]	1.20 [inWC]	1.20[inWC]	76.5 [°F]	55.0 [PSI]
24	Setpoint AB	65.0 [PSI]	1.30 [inWC]	1.30 [inWC]	77.0 [°F]	65.0 [PSI]

7.3 I/O Terminals Parameter Group

Code	Modbus Address	Full Parameter Name	OLED Display Name	Parameter Setting Range	Adj. During Run
1	301	Dry Input 1 Function	D1-SG Function	0 - None 1 - Enable 2 - Fireman's Override 3 - Speed- A 4 - Speed- B 5 - Setpoint-A 6 - Setpoint-B 7 - Damper LSW 9 - External Trip 10 - Run Forward 13 - 3-Wire Start 14 - 3-Wire Stop 15 - HOA Auto 16 - HOA Hand 17 - Shutdown 18 - Fault Reset 19 - Bypass	No
2	302	Dry Input 1 Contact	D1-SG Input	0 - Normally Open 1 - Normally Closed	No
3	303	Dry Input 2 Function	D2-SG Function	0 - None 1 - Enable 2 - Fireman's Override 3 - Speed- A 4 - Speed- B 5 - Setpoint-A 6 - Setpoint-B 7 - Damper LSW 9 - External Trip 10 - Run Forward 13 - 3-Wire Start 14 - 3-Wire Stop 15 - HOA Auto 16 - HOA Hand 17 - Shutdown 18 - Fault Reset 19 - Bypass	No
4	304	Dry Input 2 Contact	D2-SG Input	0 - Normally Open 1 - Normally Closed	No

Code	Modbus Address	Full Parameter Name	OLED Display Name	Parameter Setting Range	Adj. During Run
5	305	Wet Input 1 Function	V1-V2 Function	0 - None 1 - Enable 2 - Fireman's Override 3 - Speed- A 4 - Speed- B 5 - Setpoint-A 6 - Setpoint-B 7 - Damper LSW 9 - External Trip 10 - Run Forward 13 - 3-Wire Start 14 - 3-Wire Stop 15 - HOA Auto 16 - HOA Hand 17 - Shutdown 18 - Fault Reset 19 - Bypass	No
6	306	Wet Input 1 Type	V1-V2 Input	0 - Active High 1 - Active Low	No
7	307	Wet Input 2 Function	V3-V4 Function	0 - None 1 - Enable 2 - Fireman's Override 3 - Speed- A 4 - Speed- B 5 - Setpoint-A 6 - Setpoint-B 7 - Damper LSW 9 - External Trip 10 - Run Forward 13 - 3-Wire Start 14 - 3-Wire Stop 15 - HOA Auto 16 - HOA Hand 17 - Shutdown 18 - Fault Reset 19 - Bypass	No
8	308	Wet Input 2 Type	V3-V4 Input	0 - Active High 1 - Active Low	No

Code	Modbus Address	Full Parameter Name	OLED Display Name	Parameter Setting Range	Adj. During Run
9	309	Relay Output Select	O1-O2 Function	0 - Fault 1 - Run 2 - Proof of Run	No
10	310	Relay Contact	O1-O2 Output	0 - Normally Open 1 - Normally Closed	No
14	314	1A mA Min Value	1A Input Min mA	0.00 to 20.00 [mA]	No
15	315	1A Min Hz	1A Min Hz	0.00 to [Prime-07] [Hz]	No
16	316	1A mA Max Value	1A Input Max mA	0.00 to 20.00 [mA]	No
17	317	1A Max Hz	1A Max Hz	0.00 to [Prime-07] [Hz]	No
18	318	1A Input Filtering Level	1A Input Filter	0 - Low 1 - Medium 2 - High	Yes
19	319	1A V Min Value	1A Input Min V	0.00 to 10.00 [V]	No
21	321	1A V Max Value	1AInput Max V	0.00 to 10.00 [V]	No
23	323	2A V Input Filtering Level	2A Input Filter	0 - Low 1 - Medium 2 - High	Yes
24	324	2A V Input Min Value	2A Input Filter	0.00 to 10.00 [V]	No
25	325	2A V Input Min Hz	2A Min Hz	0.00 to [Prime-07] [Hz]	No
26	326	2A V Input Max Value	2A Input Max V	0.00 to 10.00 [V]	No
27	327	2A V Input Max Hz	2A Max Hz	0.00 to [Prime-07] [Hz]	No
28	328	2A Output Selection	2A Function	0 - Output Frequency 1 - Output Current 2 - DC Bus Voltage	Yes
29	329	2A Output Scaling	2A Output Scaling	10 to 200 [%]	Yes
48	348	Option Board Enable	Option Board	0 - Disabled 1 - Enabled	No

Code	Modbus Address	Full Parameter Name	OLED Display Name	Parameter Setting Range	Adj. During Run
49	349	Dry Input 3 Function	D3-SG Function	0 - None 1 - Enable 2 - Fireman's Override 3 - Speed- A 4 - Speed- B 5 - Setpoint-A 6 - Setpoint-B 7 - Damper LSW 8 - Reserved 9 - External Trip 10 - Run Forward 11 - Reserved 12 - Reserved 13 - 3-Wire Start 14 - 3-Wire Stop 15 - HOA Auto 16 - HOA Hand 17 - Shutdown 18 - Fault Reset 19 - Bypass 20 - Reserved	
50	350	Dry Input 3 Contact	D3-SG Input	0 - Normally Open 1 - Normally Closed	
51	351	Dry Input 4 Function	D4-SG Function	0 - None 1 - Enable 2 - Fireman's Override 3 - Speed- A 4 - Speed- B 5 - Setpoint-A 6 - Setpoint-B 7 - Damper LSW 8 - Reserved 9 - External Trip 10 - Run Forward 11 - Reserved 12 - Reserved 13 - 3-Wire Start 14 - 3-Wire Stop 15 - HOA Auto 16 - HOA Hand 17 - Shutdown 18 - Fault Reset 19 - Bypass 20 - Reserved	

Code	Modbus Address	Full Parameter Name	OLED Display Name	Parameter Setting Range	Adj. During Run
52	352	Dry Input 4 Contact	D4-SG Input	0 - Normally Open 1 - Normally Closed	
53	353	Relay 3 Output Select	O3-O4-O5 Function	0 - Fault 1 - Run 2 - Proof of Run	Yes
64	364	3A mA Min Value	3A Input Min mA	0.00 to 20.00 [mA]	No
65	365	3A Min Hz	3A Min Hz	0.00 to [Prime-07] [Hz]	No
66	366	3A mA Max Value	3A Input Max mA	0.00 to 20.00 [mA]	No
67	367	3A Max Hz	3A Max Hz	0.00 to [Prime-07] [Hz]	No
68	368	3A Input Filtering Level	3A Input Filter	0 - Low 1 - Medium 2 - High	Yes

I/O Group Application Defaults

Code	OLED Display Name	Basic	Supply Fan	Exhaust Fan	Cooling Tower	Surface/ Booster Pump
1	D1-SG Function	(10) Run FWD	(10) Run FWD	(10) Run FWD	(10) Run FWD	(10) Run FWD
2	D1-SG Input	(0) Normally Open	(0) Normally Open	(0) Normally Open	(0) Normally Open	(0) Normally Open
3	D2-SG Function	(0) None	(0) None	(0) None	(0) None	(0) None
4	D2-SG Input	(0) Normally Open	(0) Normally Open	(0) Normally Open	(0) Normally Open	(0) Normally Open
5	V1-V2 Function	(3) Speed-A	(3) Speed-A	(3) Speed-A	(3) Speed-A	(3) Speed-A
6	V1-V2 Input	(0) Active High	(0) Active High	(0) Active High	(0) Active High	(0) Active High
7	V3-V4 Function	(9) External Trip	(9) External Trip	(9) External Trip	(9) External Trip	(0) None
8	V3-V4 Input	(0) Active High	(0) Active High	(0) Active High	(0) Active High	(0) Active High
9	O1-O2 Function	(0) Fault	(0) Fault	(0) Fault	(0) Fault	(0) Fault
10	O1-O2 Output	(0) Normally Open	(0) Normally Open	(0) Normally Open	(0) Normally Open	(0) Normally Open
14	1A Input Min mA	4.00 [mA]	4.00 [mA]	4.00 [mA]	4.00 [mA]	4.00 [mA]
15	1A Min Hz	0.00 [Hz]	0.00 [Hz]	0.00 [Hz]	0.00 [Hz]	0.00 [Hz]
16	1A Input Max mA	20.00 [mA]	20.00 [mA]	20.00 [mA]	20.00 [mA]	20.00 [mA]
17	1A Max Hz	60.00 [Hz]	60.00 [Hz]	60.00 [Hz]	60.00 [Hz]	60.00 [Hz]
18	1A Input Filter	(1) Medium	(1) Medium	(1) Medium	(1) Medium	(1) Medium
19	1A Input Min V	0.00 [V]	0.00 [V]	0.00 [V]	0.00 [V]	0.00 [V]
21	1AInput Max V	10.00 [V]	10.00 [V]	10.00 [V]	10.00 [V]	10.00 [V]
23	2A Input Filter	(1) Medium	(1) Medium	(1) Medium	(1) Medium	(1) Medium
24	2A Input Filter	0.00 [V]	0.00 [V]	0.00 [V]	0.00 [V]	0.00 [V]
25	2A Min Hz	0.00 [Hz]	0.00 [Hz]	0.00 [Hz]	0.00 [Hz]	0.00 [Hz]
26	2A Input Max V	10.00 [V]	10.00 [V]	10.00 [V]	10.00 [V]	10.00 [V]
27	2A Max Hz	60.00 [Hz]	60.00 [Hz]	60.00 [Hz]	60.00 [Hz]	60.00 [Hz]
28	2A Function	(0) Out Frequency	(0) Out Frequency	(0) Out Frequency	(0) Out Frequency	(0) Out Frequency
29	2A Output Scaling	100 [%]	100 [%]	100 [%]	100 [%]	100 [%]
48	Option Board	0 - Disabled	1 - Disabled	2 - Disabled	3 - Disabled	4 - Disabled
49	D3-SG Function	(0) None	(0) None	(0) None	(0) None	(0) None
50	D3-SG Input	(0) Normally Open	(0) Normally Open	(0) Normally Open	(0) Normally Open	(0) Normally Open
51	D4-SG Function	(0) None	(0) None	(0) None	(0) None	(0) None
52	D4-SG Input	(0) Normally Open	(0) Normally Open	(0) Normally Open	(0) Normally Open	(0) Normally Open

Code	OLED Display Name	Basic	Supply Fan	Exhaust Fan	Cooling Tower	Surface/ Booster Pump
53	O3-O4-O5 Function	(0) Fault	(0) Fault	(0) Fault	(0) Fault	(0) Fault
64	3A Input Min mA	4.00 [mA]	4.00 [mA]	4.00 [mA]	4.00 [mA]	4.00 [mA]
65	3A Min Hz	0.00 [Hz]	0.00 [Hz]	0.00 [Hz]	0.00 [Hz]	0.00 [Hz]
66	3A Input Max mA	20.00 [mA]	20.00 [mA]	20.00 [mA]	20.00 [mA]	20.00 [mA]
67	3A Max Hz	60.00 [Hz]	60.00 [Hz]	60.00 [Hz]	60.00 [Hz]	60.00 [Hz]
68	3A Input Filter	(0) Low	(0) Low	(0) Low	(0) Low	(0) Low
31						
33						

7.4 Protection Parameter Group

Code	Modbus Address	Full Parameter Name	OLED Display Name	Parameter Setting Range	Adj. During Run
1	401	Pre-Heat Mode	Preheat Mode	0 - Disabled 1 - Low Heat 2 - Medium Heat 3 - High Heat	Yes
3	403	No Motor Trip Selection	No Motor Fault	0 - Disable 1 - Enable	No
4	404	Stall Prevention	Stall Prevention	0 - Disable 1 - Enable	No
5	405	Stall Level	Stall Level	30 to 200%	No
6	406	DC Trip Prevention	DC Trip Prevent	0 - Disabled 1 - Enabled	No
7	407	Motor Overload (MOL) Level Continuous	VFD MOL Continuous	50 to 135 [%]	No
8	408	VFD Motor Overload (MOL) Class	VFD MOL	0 - Class 5 1 - Class 6 (Pump) 2 - Class 10 3 - Class 20	No
9	409	Bypass Motor Overload (MOL) Class	Bypass MOL	0 - Class 5 1 - Class 6 (Pump) 2 - Class 10 3 - Class 20	No
12	412	Motor Overcurrent Level	Overcurrent Level	70 to 200 [%]	Yes
13	413	Motor OC Delay	Overcurrent Delay	0.1 to 5.0 [Sec]	Yes
38	438	Critical Faults Number of Auto Retries	Crit Fault Retries	0 to 10	Yes

Code	Modbus Address	Full Parameter Name	OLED Display Name	Parameter Setting Range	Adj. During Run
39	439	Critical Faults Retry Delay	Crit Fault Retry Delay	1 to 360 [Min]	Yes
40	440	Light Faults Number of Auto Retries	Light Fault Retries	0 to 10	Yes
41	441	Light Faults Retry Delay	Light Fault Retry Delay	1 to 360 [Min]	Yes

Protection Group Application Defaults

Code	OLED Display Name	Basic	Supply Fan	Exhaust Fan	Cooling Tower	Surface/ Booster Pump
1	Preheat Mode	(0) Disabled	(0) Disabled	(0) Disabled	(0) Disabled	(0) Disabled
3	No Motor Fault	(1) Enable	(1) Enable	(1) Enable	(1) Enable	(1) Enable
4	Stall Prevention	(1) Enable	(1) Enable	(1) Enable	(1) Enable	(1) Enable
5	Stall Level	150%	150%	150%	150%	150%
6	DC Trip Prevent	(1) Enable	(1) Enable	(1) Enable	(1) Enable	(1) Enable
7	VFD MOL Continuous	100 [%]	100 [%]	100 [%]	100 [%]	100 [%]
8	VFD MOL	(2) 10	(2) 10	(2) 10	(2) 10	(2) 10
9	Bypass MOL	(2) 10	(2) 10	(2) 10	(2) 10	(2) 10
12	Overcurrent Level	200 [%]	200 [%]	200 [%]	200 [%]	200 [%]
13	Overcurrent Delay	0.1 [sec]	0.1 [sec]	0.1 [sec]	0.1 [sec]	0.1 [sec]
38	Critical Fault Retries	3	3	3	3	3
39	Critical Fault Retry Delay	3	3	3	3	3
40	Light Fault Retries	3	3	3	3	3
41	Light Fault Retry Delay	2	2	2	2	2

7.5 Communications Parameter Group

Code	Modbus Address	Full Parameter Name	OLED Display Name	Parameter Setting Range	Adj. During Run
1	501	Protocol	Protocol	0 - Modbus RTU 1 - Modbus TCP/IP 2 - BACnet MS/TP 3 - BACnet IP	Yes
3	503	Write Access	Write Access	0 - Disabled 1 - Enabled	Yes
4	504	Loss of Comms	Com Loss Action	0 – Fault 1 – Stop (uses selected stop mode) 2 – Hold Speed	Yes
5	505	Timeout	Com Loss Delay	0.1 to 120.0 [Sec]	Yes
6	506	Baudrate	RS-485 Baud	0 - 9600 1 - 19200 2 - 38400 3 - 57600 4 - 76800 5 - 115200	Yes
7	507	Parity/Stop Bits	Modbus RTU	0 - None, 2 Stop 1 - Even, 1 Stop 2 - Odd, 1 Stop 3 – None, 1 Stop	Yes
9	509	Modbus Device Address	Modbus RTU Address	1-247	Yes
10	N/A	BACnet MAC/ID	BACnet MS/TP MAC Address	0 to 127	Yes
11	N/A	BACnet Max Master	BACnet MS/TP Max Master	0 to 127	Yes
12	N/A	BACnet Device Instance	BACnet Device	0-4194303	Yes
27	527	Comms Run/Stop	N/A	0 - Stop 1 - Run	Yes
28	528	Comms Command Frequency	N/A	Min Freq Limit to High Freq Limit	Yes
29	529	Comms PID Setpoint	N/A	0.0 to 95% of [PID Feedback Max]	Yes
30	530	Comms Reset Fault	N/A	0 - None 1 - Reset	Yes
36	536	Bluetooth Enable	Bluetooth	0 - Disable 1 - Enable	Yes

Communications Group Application Defaults

Code	OLED Display Name	Basic	Supply Fan	Exhaust Fan	Cooling Tower	Surface/ Booster Pump
1	Protocol	(0) Modbus RTU	(0) Modbus RTU	(0) Modbus RTU	(0) Modbus RTU	(0) Modbus RTU
3	Write Access	(1) Enabled	(1) Enabled	(1) Enabled	(1) Enabled	(1) Enabled
4	Comms Loss Action	(2) Hold Speed	(2) Hold Speed	(2) Hold Speed	(2) Hold Speed	(1) Stop
5	Com Loss Delay	1.0 [sec]	1.0 [sec]	1.0 [sec]	1.0 [sec]	1.0 [sec]
6	RS-485 Baud	(1) 19200 bps	(1) 19200 bps	(1) 19200 bps	(1) 19200 bps	(1) 19200 bps
7	Modbus RTU	1 (Even, 1 Stop)	1 (Even, 1 Stop)	1 (Even, 1 Stop)	1 (Even, 1 Stop)	1 (Even, 1 Stop)
8	Response Delay	5 [mSec]	5 [mSec]	5 [mSec]	5 [mSec]	5 [mSec]
9	Modbus RTU Address	247	247	247	247	247
10	BACnet MS/TP MAC Address	1	1	1	1	1
11	BACnet MS/TP Max Master	127	127	127	127	127
12	BACnet Device Instance 1	2230000	2230000	2230000	2230000	2230000
	Instance 2					

7.6 View Information Parameter Group

Code	Modbus Address	Full Parameter Name	OLED Display Name	Parameter Setting Range	Adj. During Run
1	601	VFD Output Frequency	Output Frequency	0.00 to 240.00 [Hz]	N/A
2	602	Motor Speed	Motor Speed	0 to 3600 [RPM]	N/A
3	603	Wattmeter [1]	Wattmeter	0 to 4,294,967,295 [kWh]	N/A
	604	Wattmeter [2]			
5	605	Average Output Current	Average Current	0.0 to 6xVFD FLA [A]	N/A
6	606	Line U Current	Line U Current	0.0 to 6xVFD FLA [A]	N/A
7	607	Line V Current	Line V Current	0.0 to 6xVFD FLA [A]	N/A
8	608	Line W Current	Line W Current	0.0 to 6xVFD FLA [A]	N/A
9	609	DC Bus Voltage	DC Bus Voltage	0 to 1000 [V]	N/A
10	610	Output Voltage	Output Voltage	0 to 600 [V]	N/A
11	611	Output Status	Output Status	0 - VFD Off 1 - Accelerate 2 - Decelerate 3 - Steady 4 - Speed search 5 - Flying start 6 - DC Output 7 - Preheat 8 - DC trip prevention 9 - Stall prevention 10 - Bypass off 11 - Bypass run	N/A
12	612	System Status	System Status	0 - VFD stop 1 - VFD run 2 - VFD disabled 3 - VFD fault 4 - VFD shutdown 5 - VFD fireman's override 6 - VFD auto reset 8 - Power-on delay 12 - Signal loss 14 - PID run 15 - Open damper 18 - Bypass stop 19 - Bypass manual 20 - Bypass override 22 - Bypass auto on fault 23 - Bypass disabled 24 - Bypass fault 25 - Bypass shutdown 27 - Bypass auto on comms loss	N/A

Code	Modbus Address	Full Parameter Name	OLED Display Name	Parameter Setting Range	Adj. During Run
13	613	Fault	Fault	0 - None 1 - Motor Overload (C) 2 - Motor Over Current (C) 3 - VFD Over Current (C) 4 - VFD Over Heat (C) 5 - VFD Short Circuit (C) 6 - Over Voltage (L) 7 - Under Voltage (L) 8 - Input Phase Open (L) 9 - Output Phase Open (L) 10 - No Motor (L) 11 - Incorrect Output Wiring 12 - Power Board Uncalibrated 13 - Ground Fault (L) 21 - Bypass Motor Overload 22 - Bypass Phase Unbalance 23 - Bypass Phase Loss 24 - Bypass Board Error 25 - Bypass Stall 26 - Bypass Max Time 27 - Bypass Ground Fault 28 - Bypass Communications Error 29 - Bypass Contactor 30 - Bypass Current At Power On 31 - Bypass No Motor Current 32 - Bypass Locked Rotor 33 - Bypass Unexpected Current 34 - Bypass No Motor Current 41 - Limit Switch (H) 42 - Damper Overload (L) 43 - Control Reserved 45 - External Trip (M) 46 - Power Board Error (M) 47 - Control Board Error (M) 48 - VFD Cooling Fan (L) 49 - Power Board Communications Error (M) 51 - BMS Communications Loss (A) 52 - Analog Signal Loss 53 - Transducer Signal Loss (A) 54 - EEPROM Error 55 - Calibration CRC Failed 56 - Bluetooth Key CRC Failed 57 - Invalid Firmware	N/A

Code	Modbus Address	Full Parameter Name	OLED Display Name	Parameter Setting Range	Adj. During Run
15	615	PID Feedback Value	PID Feedback	0.0 to 6000.0 [Unit]	N/A
17	617	Inverter temperature	IGBT Temp	0 to 160 /0-100 [°C]/ %	N/A
18	618	PCB temperature	Ambient Temp	0 to 160 [°C]	N/A
19	619	Power-On Time [1]	Power-On Time	0 to 4,294,967,295 [Sec]	N/A
	620	Power-On Time [2]			
21	621	Run time [1]	Motor Run Time	0 to 4,294,967,295 [Sec]	N/A
	622	Run time [2]			
23	623	D1-SG Status	D1-SG Input	0 - Open 1 - Closed	N/A
24	624	D2-SG Status	D2-SG Input	0 - Open 1 - Closed	N/A
25	625	V1-V2 Status	V1-V2 Input	0 - Deenergized 1 - Energized	N/A
26	626	V3-V4 Status	V3-V4 Input	0 - Deenergized 1 - Energized	N/A
27	627	O1-O2 Status	O1-O2 Output	0 - Open 1 - Closed	N/A
28	628	HOA Status	HOA Mode	0 - Off 1 - Hand 2 - Auto 3 - Bluetooth	N/A
29	629	Bypass Smart Start	N/A	0 - Smart Start Disabled 1 - Smart Start Enabled	No
31	631	1A mA Input	N/A	N/A (Read only)	N/A
32	632	1A V Input	1A Input	0.00 to 24.00	N/A
34	634	2A V Input	2A Input	0.00 to 10.00	N/A
35	635	2A mA Output	N/A	.00 to 20.00	N/A
36	636	2A V Output	N/A	0.00 to 10.00	N/A
37	637	Power	Average Power	Varies depending on VFD size [kW]	N/A
39	639	Target Frequency	Target Frequency	Min Freq Limit to High Freq Limit [Hz]	N/A
40	640	Run Command Source	Run Command	0 - None 1 - Run 2 -Terminals 3 - 3 Wire 4 - Communication 5 - Mobile	N/A

Code	Modbus Address	Full Parameter Name	OLED Display Name	Parameter Setting Range	Adj. During Run
41	641	Speed Reference Source	Speed Reference	0 - None 1 - Keypad 2 - Analog 1A 3 - Analog 2A 4 - Communication 5 - Mobile 6 - PID	N/A
46	646	VFD Cooling Fan RPM	Cooling Fan	0-7200 RPM	Yes
47	647	1A Type	N/A	0 - 0-10 V Input 1 - 4-20mA Input	N/A
48	648	2A Type	N/A	0 - 0-10 V Input 1 - 0-10 V Output 2 - 4-20mA Output	N/A
49	649	D3-SG Status	D3-SG Input	0 - Open 1 - Closed	N/A
50	650	D4-SG Status	D4-SG Input	0 - Open 1 - Closed	N/A
51	651	O3-O4 Status	O3-O4 Output	0 - Open 1 - Closed	N/A
52	652	O4-O5 Status	O4-O5 Output	0 - Open 1 - Closed	N/A
53	653	3A mA Input	3A Input	N/A (Read only)	N/A
54	654	Bluetooth Error	Bluetooth Error	0 - None 1 - HW Comms Fail 2 - No "Adv Off" Rsp 3 - No "Cfg" Response 4 - No "Cfg Val" Rsp 5 - No "Write" Rsp 6 - No "Adv On" Rsp 7 - No "LNAME" Rsp 8 - No "SNAME" Rsp 9 - No "Disconnect" Rsp 10 - No "Satus Ok" Rsp 11 - No "Version" Rsp 12 - No "Transparent" Rsp 13 - No "Tx Comp" Rsp 14 - Unexpected Reset 15 - Unexpected Element 16 - Invalid Firmware 17 - No "Exit Trans" Rsp 18 - Procedure Overrun 19 - Not In Trans Mode 20 - No "LBD" Response 21 - No "DCN" Response 22 - FW Upgrade Failure	N/A
100	N/A	Bluetooth Key	Bluetooth Key		Yes

Code	Modbus Address	Full Parameter Name	OLED Display Name	Parameter Setting Range	Adj. During Run
116	N/A	Bluetooth MAC ID	Bluetooth MAC ID		Yes
128	N/A	Bluetooth Name	Bluetooth Name		Yes

7.7 Fault Codes

Code	Full Parameter Name	OLED Display Name	Parameter Setting Range	Adj. During Run
1	Fault	Fault	0 - None 1 - Motor Overload (C) 2 - Motor Over Current (C) 4 - VFD Over Heat (C) 8 - Input Phase Open (L) 9 - Output Phase Open (L) 10 - No Motor (L) 11 - Incorrect Output Wiring 12 - Power Board Uncalibrated 13 - Ground Fault (L) 21 - Bypass Motor Overload (L) 26 - Bypass Max Time (L) 27 - Bypass Ground Fault (L) 28 - Bypass Communications Error 29 - Bypass Contactor (L) 30 - Bypass Current at Power On (L) 31 - Bypass No Motor Current (L) 33 - Bypass Unexpected Current (L) 41 - Limit Switch 42 - Damper Overload (L) 43 - Control Reserved 44 - No Flow (L) 45 - External Trip (M) 47 - Control Board Error (M) 48 - VFD Cooling Fan (L) 50 - Overpressure (A) 51 - BMS Communications Loss (A) 52 - Analog Signal Loss 53 - Transducer Signal Loss (A) 54 - EEPROM Fail 55 - Calibration CRC Failed 56 - Bluetooth Key CRC Failed	N/A
4	Line U Current	Line U Current	0.0 to 6xVFD FLA [A]	N/A
5	Line V Current	Line V Current	0.0 to 6xVFD FLA [A]	N/A

Code	Full Parameter Name	OLED Display Name	Parameter Setting Range	Adj. During Run
6	Line W Current	Line W Current	0.0 to 6xVFD FLA [A]	N/A
7	DC Bus Voltage 1	DC Bus Voltage 1	0 to 1000 [V]	N/A
8	DC Bus Voltage 2	DC Bus Voltage 2	0 to 1000 [V]	N/A
9	Target Frequency	Target Frequency	0.00 to 240.00 [Hz]	N/A
10	Output Frequency	Output Frequency	0.00 to 240.00 [Hz]	N/A
12	System Status	System Status	0 - VFD stop 1 - VFD run 2 - VFD disabled 3 - VFD fault 4 - VFD shutdown 5 - VFD fireman's override 6 - VFD auto reset 8 - Power-on delay 12 - Signal loss 14 - PID run 15 - Open damper 18 - Bypass stop 19 - Bypass manual 20 - Bypass override 22 - Bypass auto on fault 23 - Bypass disabled 24 - Bypass fault 25 - Bypass shutdown 27 - Bypass auto on comms loss	N/A
11	Output Status	Output Status	0 - VFD Off 1 - Accelerate 2 - Decelerate 3 - Steady 4 - Speed search 5 - Flying start 6 - DC brake 7 - Preheat 8 - DC trip prevention 9 - Stall prevention 10 - Bypass off 11 - Bypass run	N/A
14	VFD Input Terminals	I/O Terminals	0x00 to 0xFF	N/A
15	IGBT Temperature	IGBT Temp	0 to 160 [°C]	N/A
16	PCB temperature	Ambient Temp	0 to 160 [°C]	N/A
33	Date	Date		N/A
34	Time	Time		N/A

7.8 Administration

Code	Modbus Address	Full Parameter Name	OLED Display Name	Parameter Setting Range	Adj. During Run
1	1101	Reset Motor Run Time	Motor Run Time	0 - No 1 - Yes	No
2	1102	Reset Wattmeter	Wattmeter	0 - No 1 - Yes	Yes
4	1104	Product Type	Product Type	0 - VFD 1 - VFD-Bypass	No
5	1105	VFD Model	VFD Model	0 - QLNK-003-DV 1 - QLNK-005-DV 2 - QLNK-009-DV 3 - QLNK-012-DV 4 - QLNK-017-DV 5 - QLNK-024-DV 6 - QLNK-028-DV 7 - QLNK-038-DV 8 - QLNK-045-DV 9 - QLNK-059-DV 10 - QLNK-065-DV 11 - QLNK-096-DV 12 - QLNK-124-DV 13 - QLNK-156-DV 14 - QLNK-003-D6 15 - QLNK-006-D6 16 - QLNK-011-D6 17 - QLNK-017-D6 18 - QLNK-032-D6 19 - QLNK-040-D6 20 - QLNK-052-D6 21 - QLNK-077-D6 22 - QLNK-099-D6 23 - QLNK-125-D6 24 - Invalid	No
7	1107	Contactor Model	Contractor Model	0 - NONE 1 - MRC - 9 2 - MRC - 12 3 - MRC - 18 4 - MRC - 22 5 - MRC - 32 6 - MRC - 40 7 - MRC - 50 8 - MRC - 65 9 - MRC - 75 10 - MRC - 85 11 - MRC - 100 12 - MRC - 130 13 - MRC - 150	No

Code	Modbus Address	Full Parameter Name	OLED Display Name	Parameter Setting Range	Adj. During Run
8	1108	Product Package SW Version	Product Package	Software versions use the format xx.xx.xxy, where xx is a number from 0-99 and y is a letter representing the release variant.	No
	1109	Product Package SW Version	Product Package		
10	1110	Power CPU SW Version	Power Board	See Product SW Version	No
	1111	Power CPU SW Version			
12	1112	Power CPU Bootloader SW Version	Power Bootloader	See Product SW Version	No
	1113	Power CPU Bootloader SW Version			
14	1114	Control CPU SW Version		See Product SW Version	No
	1115	Control CPU SW Version			
16	1116	Control CPU Bootloader SW Version	Control Bootloader	See Product SW Version	No
	1117	Control CPU Bootloader SW Version			
18	1118	Bypass CPU SW Version	Bypass Board	See Product SW Version	No
	1119	Bypass CPU SW Version			
20	1120	Bypass CPU Bootloader SW Version		See Product SW Version	No
	1121	Bypass CPU Bootloader SW Version			
22	1122	Option CPU SW Version*	Option Board	See Product SW Version	No
	1123	Option CPU SW Version*			

Code	Modbus Address	Full Parameter Name	OLED Display Name	Parameter Setting Range	Adj. During
24	1124	Bluetooth CPU SW Version	Bluetooth Module	See Product SW Version	No
25	1125	Bluetooth CPU SW Version			
26	1126	Power CPU HW Version		See Product SW Version	No
	1127	Power CPU HW Version			
30	1130	Date/Time	Date	Date and time is formatted using the epoch time. This is the total number of seconds elapsed since 12:00 AM, January 1st, 1970	Yes
	1131	Date/Time	Time		
32	1132	Set Date/Time			Yes
	1133	Set Date/Time			
35	1135	Serial Number	Serial Number	0 - 99,999,999	No
	1136	Serial Number			
39	1139	Tag Name[1]		Text	Yes
	1140	Tag Name[2]			
	1141	Tag Name[3]			
	1142	Tag Name[4]			
	1143	Tag Name[5]			
	1144	Tag Name[6]			
	1145	Tag Name[7]			
	1146	Tag Name[8]			
	1147	Tag Name[9]			
	1148	Tag Name[10]			
	1149	Tag Name[11]			
	1150	Tag Name[12]			
	1151	Tag Name[13]			
	1152	Tag Name[14]			
	1153	Tag Name[15]			
	1154	Tag Name[16]			
40	1155	Option Board Model		0 - None 1 - I/O Expansion	No

CHAPTER 8 - PARAMETER DESCRIPTIONS

8.2 Primary – Basic Setup Group

PRIMARY PARAMETERS

PRIMARY-1: Application Selection	
Application 1) BASIC	Default: Basic 0 - Basic 1 - Supply Fan 2 - Exhaust Fan 3 - Cooling Tower 4 - Surface/Booster Pump

PRIMARY-1 Sets parameters based on a specific application. Starter mode provides very simple motor control at set speed or at preset speeds by digital inputs.

The first step in VFD setup is an application selection.

There are six application choices: Basic, Supply Fan, Exhaust Fan, Cooling Tower Fan, Centrifugal Pump and Starter.

The **Basic** selection provides a standard basic VFD control with start/stop command from keypad and mobile app interface.

The **Supply** or **Exhaust Fan** selection sets VFD for remote BMS (Building Management System) or PLC (Programmable Logic Controller) Start/Stop control and 4-20mA speed reference signal. All other related parameters such as Transducer range, Process Unit in WC, Direct or Inverse PID, etc. will be automatically set to the most common factory default values providing accurate motor control. In some cases, extra adjustment of some parameters is necessary to achieve better control. Stop mode is set to Coast mode to protect from any possible overvoltage trips while decelerating during stop mode.

The **Cooling Tower Fan** selection configures VFD for fan motor with internal inverse PID control and feedback from a temperature transducer. The process unit is set to °F with 0-150°F temperature transducer range and 80°F PID set point. If MMC (Multi-Motor Control) feature is enabled with one of the auxiliary relays, the VFD can start a spray pump based on VFD speed and system temperature. The inverse PID control increases fan motor speed if temperature is above set point.

The **Surface/Pump** selection provides constant pressure PID control with pressure transducer feedback. The process unit is set to PSI with 0-100PSI transducer range and 50PSI set-point. The sleep mode is enabled and parameters are set to optimal values, which should be readjusted for better performance based on the system parameters and type of pump

PRIMARY-2: Rated Motor Voltage	
Motor Voltage 2) 460V	Min: 200 Max: 480 Default: 460

The motor voltage rating should be checked on the motor nameplate and set in PRIMARY-2 parameter. The VFD can produce output voltage equal to or less than input power voltage.

PRIMARY-3: Rated Motor Horsepower	
Motor Horsepower 3) 5HP	Min: 1 Max: 200 Default: 5

The HP rating from the motor nameplate should be put in this parameter. If VFD temperature rating needs to be increased up to 122°F, de-rate this parameter by 20%. The kW rating is for 230V or 415V motor with FLA close to UL table for corresponding HP rating.

PRIMARY-4: Rated Motor Current	
Motor Current 4) 0.5A	Min: 0.5 Max: 55.0 Default: 0.5

The Motor Current will automatically detect and adjust according to DC bus voltage, Line Frequency and VFD size during initial power-up. The PRIMARY-4 parameter can be changed to the motor nameplate FLA if different from default.

PRIMARY-5: Rated Motor RPM	
Motor RPM 5) 1750RPM	Min: 500 Max: 3600 Default: 1750

Motor RPM can be changed to motor nameplate RPM if different from default. It is used for motor speed display proper scaling.

PRIMARY-6: Power Line Frequency	
Line Frequency 6) 60Hz	0 - 50Hz 1 - 60Hz Default: 60Hz

Power Line Standard Frequency (for VFD and Bypass) - The Line Frequency parameter should be set to match the power line frequency 50Hz or 60Hz.

PRIMARY-7: Maximum Frequency	
Max Frequency 7) 60Hz	Min: 30.00 Max: 240.00 Default: 60.00

The PRIMARY-7 parameter should be set to the maximum output frequency that VFD can produce at full speed reference signal. For most standard industrial motors, it should be set to 50Hz or 60Hz.

Max Frequency determines the full range of the VFD speed control (VFD output frequency). The analog input range is scaled to VFD maximum frequency.

PRIMARY-8: Base Frequency	
Base Frequency 8) 60Hz	Min: 30.00 Max: PRIMARY-7 Default: 60.00

VFD provides full output voltage at this frequency. The PRIMARY-8 parameter should be set to the motor nameplate frequency rating. If Maximum Frequency is set to 70Hz, Base to 60Hz and Motor Voltage to 230V, the VFD during acceleration will output 230V at 60Hz and from this point increase only frequency to 70Hz.

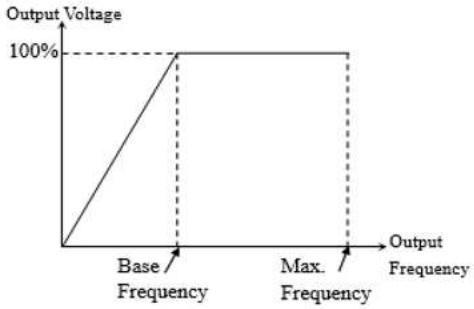

PRIMARY-9: High Frequency Limit	
High Frequency Limit 9) 60Hz	Min: PRIMARY-10 Max: PRIMARY-7 Default: 60.00

If speed control signal exceeds "Frequency High Limit," then the VFD will run at Freq. High Limit Hz. (PID mode has separate frequency limit parameters).

The VFD has High and Low limit settings for the output frequency in both Remote and Local control modes. The PID control mode has separate output frequency limit settings. When VFD speed reference is set below Low Frequency limit or above High limit, the VFD output will stay at frequency limit.

PRIMARY-10: Low Frequency Limit	
Low Frequency Limit 10) 15Hz	Min: 5.00Hz Max: High Frequency Default: 15.00

VFD output frequency low limit (No PID). Low Frequency Limit will be set to 15.00Hz or 20.00Hz based on PRIMARY-01 selected application. If speed control signal drops below Frequency Low Limit, VFD will run at Freq. Low Limit Hz. (PID mode has separate frequency limit parameters). Example of VFD actual reference with 100Hz Max. Freq: 80Hz High Limit and 30Hz Low Limit.

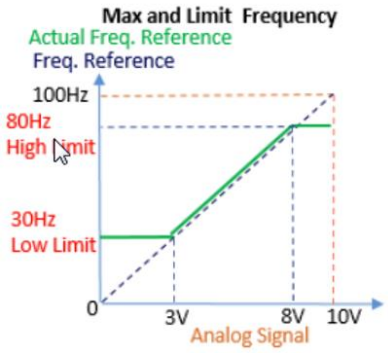

PRIMARY-11: Carrier Frequency	
Carrier Frequency 11) 2.5kHz	Min: 2.0 Max: 10.0 Default: 2.5 kHz

The carrier frequency determines how many pulses the inverter transistors will create during one cycle. Some motors can create an audible noise, which can be eliminated by adjusting this carrier frequency during stop or run mode.

PRIMARY-15: Power-On Run	
Power-On Run 15) Enabled	0 – Disabled 1 – Enabled Default: Enabled

When set to (1) Enable, VFD will start at every power-up if run command is present.

PRIMARY-16: Power-On Run Delay	
Power-On Run Delay 16) 0H:00M:05S	Min: 0 Max: 9999s Default: 5s

VFD will start after power up is done and delay time has expired (if run command is present).

PRIMARY-17: Run After Fault Reset	
Fault Reset & Run 17) Enabled	Default: Enabled 0 – Disabled 1 - Enabled

When set on Yes, VFD will start automatically after VFD fault is reset.

Restart after Fault Reset. If Enabled is selected, VFD will restart after fault reset (Manual, via DI or Comms) with start command present. If Disabled is selected, VFD will not restart after fault reset (Manual, via DI or Comms) with start command present. VFD will be in Stop mode until start command is removed and reapplied.

PRIMARY-18: Torque Boost	
Fault Reset 18) Enabled	Default: Enabled 0 – Disabled 1 - Enabled

Torque Boost feature provides initial voltage (voltage offset of V/F curve) at start for torque boost.

PRIMARY-19: Torque Boost Level	
Fault Reset 19) Enabled	Min: 0.00 Max: 15.00 Default: 2.00

Torque boost value is set as % of line voltage.

PRIMARY-20: Start Mode	
Start Mode 20) Accelerate	0- Accelerate 1- DC Start 2- Flying Start Default: 2- Flying Start

Three start modes: Accelerate- VFD ramps up based on V/F mode, DC-Start - DC brake applied before ramping up, Flying Start- Allows VFD to start with already rotating motor load without tripping on fault (Speed search function).

- When PID is disabled and start command is received, VFD will ramp up to frequency reference based on acceleration time setting.
- When PID is enabled and start command is received, VFD will ramp up to PID Low Limit Frequency based on acceleration time setting and then it will switch to PID mode with its own Accel time.

PRIMARY-21: DC Start Level	
DC Start Level 21) Low	0 - Low 1 - Medium 2 - High Default: Low

DC Injection braking during start. Three levels: Low w/50% Braking level and 8 sec timer; Medium at 60% & 12 sec; Heavy at 70% & 16sec. Timing and level will be finalized during testing.

PRIMARY-22: HOA Type	
HOA Type 22) Keyboard HOA	0 - Keypad HOA 1 - Auto Only 2 - Keypad Off/Auto 3 - External HOA Default: (0) Keypad HOA

0 - VFD HOA: Fully functional HOA keypad.
1 - Auto Only- HOA is Disabled & VFD is always in Auto mode, no changes by HOA keys.
2 - Hand Disabled- Fully functional Auto Mode and VFD can be stopped by HOA in OFF. No Hand Mode.
3 - If External HOA is selected, two digital inputs should be set to Hand and Auto and HOA switch should be wire to those inputs. (If both DIs are activated= Hand). Refer to Fig. 04 and Fig. 05 below.

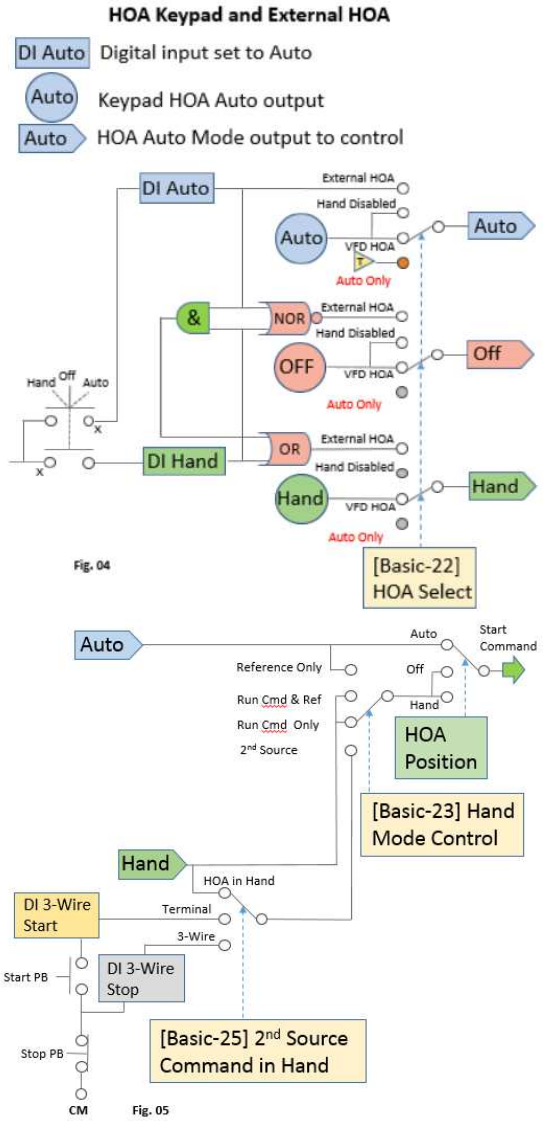

PRIMARY-23: Run Command in Hand	
Hand Run Cmd 23) Always Run	0 - HOA in Hand 1 - Terminal 2 - 3-Wire 3 - Comms Default: (0) HOA in Hand

Selections for Run Command in HOA Hand position. VFD starts when:
0 - HOA is in Hand;
1 - HOA= Hand and selected terminal is activated;
2 - HOA=Hand & Start Button is pressed,
6 - HOA= Hand & start command is given via comms.

PRIMARY-24: Speed Reference in Hand	
Hand Speed Ref 24) Keypad	0 - Keypad 1 - 1A Analog Input 2 - 2A Analog Input 3 - Communications 4 - 3A Analog Input Default: (0) Keypad

Selections for Speed Reference in HOA Hand position.

When HOA is in Hand position, PID mode is disabled. 2A is available when 2A DIP Switch is set to Input.

PRIMARY-27: Keypad Frequency	
Keypad Frequency 27) 15Hz	Min: PRIMARY-10 (Low Frequency) Max: PRIMARY-9 (High Frequency) Default: 15Hz

Freq reference via keypad in Hand or Auto Mode.

PRIMARY-30: Stop Mode	
Stop Mode 30) Coast	Default: Decelerate 0 - Decel 1 - Coast

When stop command is received, VFD will stop based on selection: DECEL - Decrease output frequency to 0Hz per Deceleration Time setting, COAST - immediately stop switch and motor will coast to a stop

PRIMARY-31: DC Brake Frequency	
Stop Mode 30) Coast	Default: Decelerate 0 - Decel 1 - Coast

PRIMARY-34: Acceleration Time	
Accel Time 34) 30.0s	Min: 1.0s Max: 6000.0s Default: 30.0s

Time it takes to accelerate from 0.00 Hz to Max Frequency.

PRIMARY-35: Deceleration Time	
Decel Time 35) 30.0s	Min: 1.0s Max: 6000.0s Default: 30.0s

The time it takes to decelerate from Max Frequency to 0.00 Hz.

PRIMARY-36: V/F Mode	
V/F Mode 36) Linear	0 - Linear 1 – Squared Default: (0) Linear

Linear pattern maintains a linear V/Hz ratio. Squared pattern maintains a squared V/Hz pattern, ideal for fan/pump applications.

Linear

Provides linear change of output Voltage corresponding to output frequency change. Linear pattern maintains a linear V/Hz ratio.

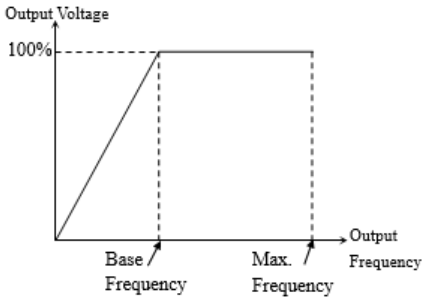

Squared

Provides squared change of output Voltage corresponding to output frequency change. This cure provides more energy efficient control for variable torque applications such as: Fans, Blowers and Pumps.

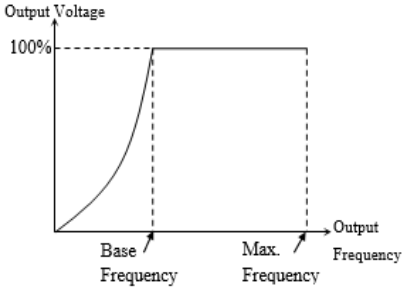

PRIMARY-41: Run Command in Auto	
Auto Run Cmd 41) Terminal	0 - HOA in Auto 1 - Terminal 2 - 3-Wire 3 - Comms Default: 1- Terminal

Selections for Run Command in HOA Auto position based on selection. VFD starts when:

0 - HOA is in Auto;
1 - HOA= Auto and selected terminal is activated;
2 - HOA=Auto & Start Button is pressed,
3 - HOA= Auto & start command is given via Comms.

PRIMARY-42: Speed Reference in Auto	
Auto Speed Ref 42) Keypad	0 - Keypad 1 - 1A Analog Input 2 - 2A Analog Input 3 - Comms 4 - PID 5 - 3A Analog Inputs Default: (0) Keypad

Selection for speed reference source in Auto mode. 1A input 0-10VDC or 4-20mA type will be set by 1A DIP switch. 2A input is always 0-10V. 2A selection is available when 2A DIP Sw is set to Input. When set to PID, all PID parameters will be available.

Keypad
When VFD HOA Auto key is pressed or external HOA SW is put in Auto position, VFD will provide output frequency corresponding to a reference given via VFD keypad.

1A Input
Provides frequency reference via 1A Input set by DIP Sw to 4-20mA or 0-10VDC (scalable in I/O group). If DIP Sw is in 24V position, processor still treats it as 0-10VDC because it will be scaled to that level by hardware components.

2A Input
Provides frequency reference via 2A Input set by DIP Sw to 0-10VDC input (scalable in I/O group).

3A Input
Provides frequency reference via 3A Input set by.

Communications
When Communication is selected as a speed reference source, VFD will provide output frequency based on reference set by communications.

PID
VFD speed reference will be provided by PID control based on difference between PID Set-point and Feedback values. When set to PID, all PID parameters will be available. When PID mode is enabled, DC trip prevention, stall prevention and skip frequencies are disabled.

PRIMARY-43: Reference Loss Condition	
Anlg Ref Loss 43) Half of Min	0 - Disabled 1 – Below ½ of Min 2 – Below Min Default: (1) Half of Min

Select either below minimum value, or below half of minimum value of the analog signal selected as a speed reference loss condition.

PRIMARY-44: Reference Loss Action	
Anlg Ref Loss Act 44) Stop	0 - Fault 1 - Stop 2 - Hold Speed Default: (1) Stop

Select a VFD action at signal loss:

0- Fault= VFD trips and manual reset or rebooting is required;
1- Stop = VFD stops using the stop mode defined in BASIC 30; Provides auto restart when signal value is equal or greater than Reference Min value, and run command is present.
2- Hold = VFD runs at previous speed.

PRIMARY-45: Reference Loss Delay	
Anlg Ref Loss 45) Delay 1s	Min: 0s Max: 20s Default: 1s

Low reading on sensor could be normal condition for some period of time. Delay should be set to prevent drive from tripping under normal condition.

PRIMARY-46: PID Mode Select	
PID Mode 46) Inverse	0 - Direct 1 – Inverse Default: Inverse

PID Control Selection: Standard- PID output decreases when F/B increases, Inverted- PID output increases when F/B increases. PID is enabled when PID is selected in Primary-42.

PRIMARY-47: PID Setpoint Source	
PID Mode Select 47)	0 - Keypad 1 - 1A Analog Input 2 - 2A Analog Input 3 - Comms 4 - 3A Analog Input Default: (0) Standard

Selection for PID Set-point source: (0)- Keypad, (1)- 1A input 0-10V or 4-20mA selected by DIP switch, (2) 2A input 0-10V available when 2A DIP switch is set to input, (3) – Communication, (4) 3A input 4-20mA.

PRIMARY-48: PID Feedback Source	
PID Mode 50) Inverted	Default: (0) 1A Input 0 - 1A Analog Input 1 - 2A Analog Input 2 - 3A Analog Input

PID Feedback source selection: (0)- 1A mA or V based on 1A DIP Sw position, (1) - 2A V input (available if 2A DIP Sw is set to Input), (2) 3A mA input

PRIMARY-49: PID Feedback Unit	
PID Feedback Unit 49)	0 - PSI 1 - GPM 2 - inWC 3 - CFM 4 - inHg 5 - Feet 6 - °F 7 - mBar 8 - Pa 9 - kPa 10 - Meters 11 - °C 12 - Custom 13 - % Default: (0) PSI

Unit selection for feedback signal.

PRIMARY-50: PID Feedback Max	
PID Feedback Max 53)	Min: 0.0 Max: 6000.00 Default: 100.0 PSI

Sensor (Transducer) maximum rating. For 0-250PSi transducer set it to 250.0PSI. * Number of decimals depends on selected Unit.

PRIMARY-52: PID Set-Point Value	
PID Set-point Value 52)	Min: 0.0 Max: [Primary-50] x 0.95 Default: Determined by Primary-1

PID Set-point (Desired pressure, temperature, GPM, etc.) Maximum value is 5% less than Sensor range for proper PID operation.

PRIMARY-55: PID P-Gain	
PID P-Gain 55) 10%	Min: 0% Max: 999% Default: 10%

P-Gain determines PID control sensitivity. Greater value provides more sensitivity.

PRIMARY-56: PID I-Gain	
I-Gain 56) 1.0s	Min: 0.1s Max: 32.0s Default: 1.0s

I-time determines PID response time. Greater value provides slower response.

PRIMARY-57: Out Ramp Time	
PID Ramp Time 57)	Min: 0.0 Max: 10.0 Default: 0.0s

Sets PID output ramp-up. Ramp-down time will be set to 150% of PRIMARY-57. Extra ramp time in addition to calculated PID value.

PRIMARY-58: PID High Frequency Limit	
PID High Freq 58)	Min: Prime-59 Max: Prime-07 Default: 60Hz

PID frequency output will be limited by Primary-58 value.

PRIMARY-59: PID Low Frequency Limit	
PID Low Freq 59)	Min: 0.0 Max: Prime-58 Default: 20Hz

PID frequency output will be limited by Primary-59 value.

PRIMARY-60: Feedback Signal Loss	
Fdbk Loss 60) Below ½ Min	0 - Disabled 1 - Below ½ of Min. 2 - Below Min. Default: Below ½ Min

Signal loss condition either Half of Analog Signal minimum value or below minimum value.

PRIMARY-61: Feedback Loss Action	
Feedback Loss Action 61) Stop	0 - Fault 1 - Stop 2 - Hold Speed Default: (1) Stop

Select a VFD action at signal loss:

0-Faults = VFD fault trips and Manual reset or rebooting is required;
1- Stop = VFD stops using the stop mode defined in BASIC 30;
2-Hold= VFD runs at previous speed.

1 and 2 selections provide auto restart when F/B signal is restored and its value is equal or greater than F/B Min value and run command is present.

PRIMARY-62: Feedback Loss Delay	
Fdbk Loss Delay 62) 1s	Min: 0s Max: 10s Default: 1s

Low reading on a sensor could be normal condition for some period of time. The delay should be set to prevent the drive from tripping under normal conditions.

8.3 VFD – Advanced Setup Group

VFD-4: Auto Bypass	
Auto Bypass 4) Disabled	0 - Disabled 1 - On VFD Fault 2 - Bypass Comm Loss 3 - VFD Fault & Bypass Comm Loss Default: Disabled

If set to "On VFD Fault" and VFD trips, the VFD bypass will start if run command is present. If set to "Bypass Comm Loss" and VFD communication is not present, the bypass will start. If set to both, bypass starts when either VFD-Bypass comms are lost or VFD is in Fault mode.

VFD-6: Damper Control	
Damper Control 6) Disabled	0 - Disabled 1 – Enabled Default: (0) Disabled

Enables Damper or Lubrication Mode. If start command is received, VFD will provide 24VDC, 0.5A to a damper motor and after Damper delay or when DSW is closed VFD will start motor.

VFD-7: Damper Delay	
Damper Delay 7) 120s	Min: 0s Max: 6000s Default: 120s

1. No damper limit switch. After start command is received, VFD will provide power to a damper motor and after Damper delay it will start the motor. There is no damper fault by limit switch.
2. If a digital input is set to damper SW and VFD receives run command, VFD provides power to damper motor and after limit SW is closed, it will start a motor. If SW is not closed within time delay, VFD will trip on damper fault.

Skip Frequencies

There are three sets of Skip Frequency pairs of parameters that let you Enable or Disable or set Low and High value for each set. The description below applies to each set respectively:

- **Disabled:** Skip frequency is disabled
- **Enabled:** Skip frequency allows you to skip from the VFD reference short frequency range of system resonant frequencies.

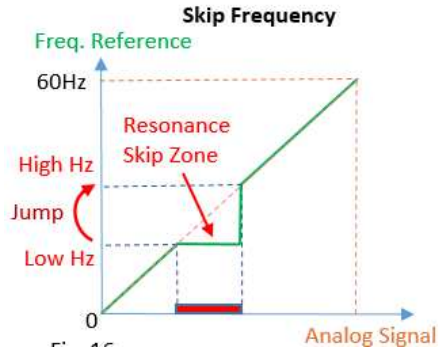

If the speed reference given digitally from a keypad or communication is set to a value in the skip zone, the VFD will run at Low Skip Hz until the speed command is at or above High Skip Hz. Then the VFD speed reference will jump from Low to High Skip Hz and the VFD output frequency will ramped up based on the acceleration time. On each skip zone, the only condition we need to maintain is that the Skip High should be at least 1Hz greater than Skip Low. Between zones it is not a problem if the 2nd Skip Zone is set below or overlapping the 1st one.

- **Low Frequency (Low frequency of the resonance skip zone)**: If analog signal or communication is used for speed reference, the VFD will continue to run at the Low Skip Frequency until the signal value is at or greater than the High Skip Frequency. Then the VFD will ramp-up from Low to High skip Hz based on the acceleration time. Range 0Hz to PRIMARY-7 (Max Frequency).
- **High Frequency (High frequency of the resonance skip zone**): Range - Low Frequency for this Skip Frequency to PRIMARY-7 (Max Frequency).

VFD-10 Skip Freq 1 Enable	
Skip Freq 1 Enable 10) Disabled	0 - Disabled 1 – Enabled Default: Disabled

Skip frequency 1 enable/disable. Used to bypass mechanical system resonance frequencies.

VFD-11 Skip Freq 1 Low	
Skip Freq 1 Low 11) 23Hz	Min: 0 Max: PRIMARY-7 Default: 23Hz

Skip frequency 1, Lower Value will appear when Skip Frequency 1 is set to Enable

VFD-12 Skip Freq 1 High	
Skip Freq 1 High 12) 26Hz	Min: VFD-11 Max: PRIMARY-7 Default: 26Hz

Skip frequency 1, Upper Value will appear when Skip Frequency 1 is set to Enable

VFD-13 Skip Freq 2 Enable	
Skip Freq 2 Enable 13) Disabled	0 - Disabled 1 – Enabled Default: Disabled

Skip frequency 2 enable/disable. Used to bypass mechanical system resonance frequencies.

VFD-14 Skip Freq 2 Low	
Skip Freq 2 Low 14) 33Hz	Min: 0 Max: PRIMARY-7 Default: 33Hz

Skip frequency 2, Lower limit will appear when Skip Frequency 2 is set to Enable

VFD-15 Skip Freq 2 High	
Skip Freq 2 High 15) 36Hz	Min: VFD-14 Max: PRIMARY-7 Default: 36Hz

Skip frequency 2, Upper limit will appear when Skip Frequency 2 is set to Enable

VFD-16 Skip Freq 3 Enable	
Skip Freq 3 Enable 16) Disabled	0 - Disabled 1 – Enabled Default: Disabled

Skip frequency 3 enable/disable. Used to bypass mechanical system resonance frequencies.

VFD-17 Skip Freq 3 Low	
Skip Freq 3 Low 17) 43Hz	Min: 0 Max: PRIMARY-7 Default: 43Hz

Skip frequency 3, Lower limit will appear when Skip Frequency 3 is set to Enable

VFD-18 Skip Freq 3 High	
Skip Freq 3 High 18) 46Hz	Min: VFD-17 Max: PRIMARY-7 Default: 46Hz

Skip frequency 3, Upper limit will appear when Skip Frequency 3 is set to Enable.

Frequency Speed Setup

There are three configurable speed parameters that allow you to set the VFD frequency to preset values, as described below:

- **Speed A:** The VFD will switch its frequency reference to preset frequency-A in Auto mode without PID control, or Hand mode when DI is set with Speed-A activated. If in Auto mode PID control is enabled and DI set with Speed-A activated, nothing will be changed in VFD operation. Fireman's override mode overrides preset speeds.

- **Speed B:** Same as above but DI is set to Speed-B.

- **Speed AB:** If one DI is set to Speed-A and another one to Speed-B and both are activated simultaneously, the VFD will run at the frequency set in ADVVFD-21. VFD operation is identical to ADVVFD-19.

VFD-19 Speed A	
Speed A 19) 30Hz	Min: PRIMARY-10 Max: PRIMARY-7 Default: 30.00Hz

Preset frequency-A by digital input for Auto mode

VFD-20 Speed B	
Speed B 20) 35Hz	Min: PRIMARY-10 Max: PRIMARY-7 Default: 35.00Hz

Preset frequency-B by digital input for Auto mode

VFD-21 Speed AB	
Speed AB 21) 40Hz	Min: PRIMARY-10 Max: PRIMARY-7 Default: 40.00Hz

Preset frequency-AB by two digital inputs for Auto mode.

VFD-22 Preset Setpoint-A	
Preset Setpoint-A 22)	Default: 50 PSI

Preset Set-point-A by digital input for PID mode.

VFD-23 Preset Setpoint-B	
Preset Setpoint-B 23)	Default: 50 PSI

Preset Set-point-B by digital input for PID mode.

VFD-24 Preset Setpoint- AB	
Preset Setpoint- AB 24)	Default: 60 PSI

Preset Set-point-AB by two digital inputs for PID mode

VFD-39 Reset User Settings	
Reset User Settings 39) No	0 - No 1 - Factory Defaults Default: (0) No

When Factory Defaults is selected, VFD will load factory defaults for motor and power line parameters.

VFD-40 Custom Param 1	
Custom Param 1 40) Output Frequency	0 - Output Frequency 1 - Motor Speed (RPM) 2 - Energy Usage 3 - Average Power 4 - Average Current 5 - Line A Current 6 - Line B Current 7 - Line C Current 8 - DC Bus Voltage 9 - Output Voltage 10 - HOA Mode 11 - IGBT Temp 12 - Ambient Temp 13 - Motor Run Time 14 - D1-SG Input 15 - D2-SG Input 16 - V1-V2 Input 17 - V3-V4 Input 18 - O1-O2 Output 19 - 1A mA Input 20 - 1A V Input 21 - 2A Input 22 - 2A mA Output 23 - 2A V Output Default: 0 – Output Frequency

Custom Parameter 1 for Configurable display

VFD-41 Custom Param 2	
Custom Param 2 41)	Speed Selection options same as VFD-40 Default: 1 - Motor

Custom Parameter 1 for Configurable display

VFD-42 Custom Param 3	
Custom Param 3 42)	Selection options same as VFD-40 Default: 2 - Energy Use

Custom Parameter 1 for Configurable display

8.4 I/O Terminals

I/O-1: D1-SG Function	
D1-SG Function 1) Run Forward	0 - None 1 - Enable 2 - Fireman's Override 3 - Speed- A 4 - Speed- B 5 - Setpoint-A 6 - Setpoint-B 7 - Damper LSW 8 - Reserved 9 - External Trip 10 - Reserved 11 - Reserved 12 - 2nd Acc/Dec Time 13 - 3-Wire Start 14 - 3-Wire Stop 15 - HOA Auto 16 - HOA Hand 17 - Shutdown 18- Fault Reset 19- Bypass 20- Reserved Default: None

Dry Input 1 function selection VFD does not allow more than one DI to be set to the same selection except (None). (21) is not for first release

I/O-2: D1-SG Input	
D1-SG Input 2) N.O.	0 – Normally Open 1 – Normally Closed Default: N.O.

Dry Input 1 Contact

I/O-3: D2-SG Function	
D2-SG Function 3) None	0 - None 1 - Enable 2 - Fireman's Override 3 - Speed- A 4 - Speed- B 5 - Setpoint-A 6 - Setpoint-B 7 - Damper LSW 8 - Reserved 9 - External Trip 10 - Reserved 11 - Reserved 12 - 2nd Acc/Dec Time 13 - 3-Wire Start 14 - 3-Wire Stop 15 - HOA Auto 16 - HOA Hand 17 - Shutdown 18- Fault Reset 19- Bypass 20- Reserved Default: None

Dry Input 2 function selection. VFD does not allow more than one DI to be set to the same selection except (None). (21) Analog input switch is not for first release

I/O-4: D2-SG Input	
D2-SG Input 4) N.O.	0 – Normally Open 1 – Normally Closed Default: N.O.

Dry Input 2 Contact

I/O-5: V1-V2 Function	
V1-V2 Function 5) Speed A	0 - None 1 - Enable 2 - Fireman's Override 3 - Speed- A 4 - Speed- B 5 - Setpoint-A 6 - Setpoint-B 7 - Damper LSW 8 - Reserved 9 - External Trip 10 - Reserved 11 - Reserved 12 - 2nd Acc/Dec Time 13 - 3-Wire Start 14 - 3-Wire Stop 15 - HOA Auto 16 - HOA Hand 17 - Shutdown 18- Fault Reset 19- Bypass 20- Reserved Default: None

Wet Input 1 function selection VFD does not allow more than one DI to be set to the same selection except (None). (21) is not for first release

I/O-6: V1-V2 Input	
V1-V2 Input 6) Active High	0 - Active High 1 - Active Low Default: Active High

Wet Input 1 Contact

I/O-7: V3-V4 Function	
V3-V4 Function 7) External Trip	0 - None 1 - Enable 2 - Fireman's Override 3 - Speed- A 4 - Speed- B 5 - Setpoint-A 6 - Setpoint-B 7 - Damper LSW 8 - Reserved 9 - External Trip 10 - Reserved 11 - Reserved 12 - 2nd Acc/Dec Time 13 - 3-Wire Start 14 - 3-Wire Stop 15 - HOA Auto 16 - HOA Hand 17 - Shutdown 18- Fault Reset 19- Bypass 20- Reserved Default: None

Wet Input 2 function selection VFD does not allow more than one DI to be set to the same selection except (None).

I/O-8: V3-V4 Input	
V3-V4 Input 8) Active High	0 - Active High 1 - Active Low Default: Active High

Wet Input 2 Contact

I/O-9: O1-O2 Function	
01-02 Function 9) Fault	0 - Fault 1 - Run 2 - Proof of Run Default: Fault

Relay Output Definition

I/O-10: O1-O2 Output Contact	
01-02 Output 10) N.O.	0 – Normally Open 1 – Normally Closed Default: N.O.

Relay Output Contact

I/O-14: 1A Input Min mA	
1A Input Min mA 14) 4mA	Min: 0.00mA Max: 20.00mA Default: 4.00mA

1A mA Input minimum value.

I/O-15: 1A Input Min Hz	
1A Min Hz 15) 0Hz	Min: 0.00 Hz Max: PRIMARY-7 Default: 0.00 Hz

1A V noise filtering: 0=100ms, 1= 250ms, 2=500ms

I/O-16: 1A Input Max mA	
1A Input Max mA 16) 20mA	Min: 0.00mA Max: 20.00mA Default: 20.00mA

1A mA or V Input frequency corresponding to Max value

I/O-17: 1A Input Max Hz	
1A Input Max Hz 17) 60Hz	Min: 0.00 Hz Max: PRIMARY-7 Default: 60.00 Hz

1A Voltage Input minimum value. For 2-10VDC signal set it to 2V

I/O-18: 1A Input Filtering Level	
1A Input Filter 19) Low	0 - Low 1 - Medium 2 – High Default: Low

I/O-19: 1A Input Min V	
1A Input Min V 19) 0V	Min: 0.0V Max: 10.0V Default: 0.0V

1A mA Input minimum value. For 4-20mA signal set it to 4mA

I/O-21: 2A Input Filter	
2A Input Filter 21) 0.0V	Min: 0.0V Max: 10.0V Default: 0.0V

I/O-23: 2A Input Filter	
2A Input Filter 23) Medium	0 - Low 1 - Medium 2 – High Default: Medium

2A V noise filtering: 0=100ms, 1= 250ms, 2=500ms

I/O-24: 2A Input Min V	
2A Input Min V 24) 0V	Min: 0.0V Max: 10.0V Default: 0.0V

2A Voltage Input minimum value. For 2-10VDC signal set it to 2V

I/O-25: 2A Input Min Hz	
2A Input Min Hz 25) 0Hz	Min: 0.00 Hz Max: PRIMARY-7 Default: 0.00 Hz

2A Voltage Input maximum value. For 0-5VDC signal set it to 5V

I/O-26: 2A Input Max V	
2A Input Max V 26) 10V	Min: 0.0V Max: 10.0V Default: 10.0V

2A Voltage Input frequency corresponding to V Min

I/O-27: 2A Input Max Hz	
2A Input Max Hz 27) 60Hz	Min: 0.00 Max: PRIMARY-7 Default: 60.00 Hz

2A Voltage Input frequency corresponding to V Max

I/O-28: 2A Output Function	
2A Function 28) Output Frequency	Default: Out. Freq. 0 - Output Frequency 1 - Output Current 2 - DC Bus Voltage 3 - Repeat 1A* 4- Repeat 3A*

2A Analog Output (0-10V or 4-20mA set by DIP Switch) parameter selection. Analog output is scaled to Max value of the selected parameter. Example: DC Link Voltage is 0-1000VDC.

I/O-29: 2A Output Scaling	
2A Output Scaling 29) 100%	Min: 10% Max: 200% Default: 100%

2A Analog output scaling. For max Frequency 60Hz at 50% setting, 2A output will provide 5VDC or 12mA (depending on 2A DIP Sw position).

I/O-48: Option Board Enable	
Option Board 48) Enabled	0 - Disable 1 – Enable Default: Enabled

I/O-49: Dry Input 3 Function	
D3-SG Function 49) None	0 - None 1 - Enable 2 - Fireman's Override 3 - Speed- A 4 - Speed- B 5 - Setpoint-A 6 - Setpoint-B 7 - Damper LSW (H) 8 - Reserved 9 - External Trip 10 - Reserved 11 - Reserved 12 - 2nd Acc/Dec Time 13 - 3-Wire Start 14 - 3-Wire Stop 15 - HOA Auto 16 - HOA Hand 17 - Shutdown 18- Fault Reset 19- Bypass 20- Reserved Default: None

I/O-50: Dry Input 3 Contact	
D3-SG Input 50) N.O.	0 – Normally Open 1 – Normally Closed Default: N.O.

I/O-51: Dry Input 3 Contact	
D3-SG Function 51) None	0 - None 1 - Enable 2 - Fireman's Override 3 - Speed- A 4 - Speed- B 5 - Setpoint-A 6 - Setpoint-B 7 - Damper LSW (H) 8 - Reserved 9 - External Trip 10 - Reserved 11 - Reserved 12 - 2nd Acc/Dec Time 13 - 3-Wire Start 14 - 3-Wire Stop 15 - HOA Auto 16 - HOA Hand 17 - Shutdown 18- Fault Reset 19- Bypass 20- Reserved Default: None

I/O-52: Dry Input 4 Contact	
D4-SG Input 52) N.O.	0 – Normally Open 1 – Normally Closed Default: N.O.

I/O-53: Relay 3 Output Select	
O3-O4-O5 Function 53) Fault	0 - Fault 1 - Run 2 - Proof of Run Default: (0) Fault

2A Voltage Input minimum value. For 2-10VDC signal set it to 2V

I/O-64: 3A mA Min Value	
3A Input Min mA 64) 0Hz	Min: 0.00 Max: 20.00 [mA] Default: 0.00

2A Voltage Input maximum value. For 0-5VDC signal set it to 5V

I/O-65: 3A Min Hz	
3A Min Hz 65) 0Hz	Min: 0.00 Max: PRIMARY-7 Default: 0.00

2A Voltage Input frequency corresponding to V Min

I/O-66: 3A mA Max Value	
3A mA Max Value 66) 20.00mA	Min: 0.00 Max: 20.00 [mA] Default: 20.00 [mA]

2A Voltage Input frequency corresponding to V Max

I/O-67: 3A Max Hz	
3A Max Hz 67) 60Hz	Min: 0.00 Max: PRIMARY-7 Default: 60.00 Hz

2A Analog Output (0-10V or 4-20mA set by DIP Switch) parameter selection. Analog output is scaled to Max value of the selected parameter. Example: DC Link Voltage is 0-1000VDC.

I/O-68: 3A Input Filtering Level	
3A Input Filter 68) Fault	0 - Fault 1 - Run 2 - Proof of Run Default: (0) Fault

2A Analog output scaling. For max Frequency 60Hz at 50% setting, 2A output will provide 5VDC or 12mA (depending on 2A DIP Sw position).

8.5 Protection

PROT-1: Preheat Mode	
Preheat Mode 1) Disabled	0 - Disabled 1 - Low Heat 2 - Medium Heat 3 - High Heat Default: Disabled

0 - Pre-Heat Disabled;
1 - Low current level with low duty cycle for cool temperatures. VFD provides low level pre-heat current with low duty cycle. It should be enough to keep motor winding warm during cool summer nights;
2 - Medium current level with medium duty cycle for cold temperatures. VFD provides medium level pre-heat current with medium duty cycle. It should be enough to keep motor winding warm during cool days and cold nights in autumn or spring;
3 - High current level with High duty cycle for freezing temperatures. VFD provides high level pre-heat current with high duty cycle. It should be enough to keep motor winding warm during cold days and freezing nights in winter.

PROT-3: No Motor Fault	
No Motor Fault 3) Enabled	0 - Disable 1 – Enable Default: Enabled

All three phases have current below 15% of FLA for 250ms

PROT-4: Stall Prevention	
Stall Prevention 4) Enabled	0 - Disable 1 – Enable Default: Enabled

This works as a current limiting function protecting motor from excessive current above the stall level setting by decreasing the motor speed until the current is reduced to the stall level or speed is reduced to the minimum speed.

PROT-5: Stall Level	
Stall Level 5) 150%	Min: 30% Max: 200% Default: 150%

Stall level is set as a percentage of the motor FLA.

PROT-6: DC Trip Prevention	
DC Trip Prevention 6) Enabled	0 - Disabled 1 – Enabled Default: Enabled

Enables prevention of DC Trip.

PROT-7: Overload Continuous	
Ovld Continuous 7) 100%	Min: 50% Max: 135% Default: 100%

EOL continuous level (SFA if motor can run at SF 24/7) EOL is always enabled to protect motor.

Overload Continuous is a percentage of PRIMARY-04 Motor FLA for continuous run without E-Thermal trip. It can be set to motor SFA (service factor amps) if motor is designed to operate at service factor amps continuously like submersible pump motors. For most of the standard induction motors this value should be kept at 100% (default).

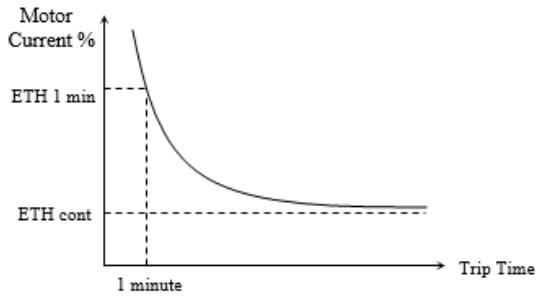

PROT-8: Overload Trip Class	
Ovld Trip Class 8) 10%	Min: 1% Max: 50% 0 - Class 5 1 - Class 6 (Pump) 2 - Class 10 3 - Class 20 Default: 10%

Motor overload industry standard class curve selections. (ONLY for VFD)

PROT-9: Bypass MOL Class	
Bypass MOL Class 9) 10	0 - Class 5 1 - Class 6 (Pump) 2 - Class 10 3 - Class 20 Default: (2) 10

Motor overload industry standard class curve selections. (ONLY for VFD)

PROT-12: Overcurrent Level	
Overcurrent Level 12) 200%	Min: 70% Max: 200% Default: 200%

% of motor FLA. If any phase current is greater than setting for MOC delay, VFD trips.

This level as a percentage of Motor FLA determines a fault trigger point. If motor current exceeds this level for PROT-13 Delay time, the VFD trips on Motor Overcurrent (MOC). This is a safeguard from running the motor with windings or motor leads electrical failure.

PROT-13: Overcurrent Delay	
Overcurrent Delay 13) 0.1s	Min: 0.1s Max: 5.0s Default: 0.1s

Delay before Motor Overcurrent Fault occurs.

Sets the delay time for the Motor Overload trip. Timer starts when the current exceeds PROT-12 level. Timer will be reset if counting during Motor Overload Current Condition and the current drops below the Motor Overload Current Level.

PROT-38: Critical Fault Retries	
Crit Fault Retries 38) 3	Min: 0 Max: 10 Default: 3

Sets number of retry attempts. 0 = disabled.

PROT-39: Critical Fault Retry Delay	
Crit Fault Retry Delay 39) 180s	Min: 0s Max: 6000s Default: 180s

Sets time delay before retry attempts. Available when PRIMARY-18 is greater than 0

PROT-40: Normal Fault Retries	
Nrml Fault Retries 40) 3	Min: 0 Max: 10 Default: 3

Sets number of retry attempts. 0 = disabled.

PROT-41: Normal Fault Retry Delay	
Nrml Fault Retry Delay 41) 120s	Min: 0s Max: 6000s Default: 120s

Sets time delay before retry attempts. Available when PRIMARY-18 is greater than 0.

8.6 Communication

COMMS-1: Communication Protocol Selection	
Protocol 1) ModBus RTU	0 - Modbus RTU 2 - BACnet MS/TP Default: ModBus RTU

Comms Protocol Selection.

COMMS-3: Communications Write Access	
Write Access 3) Disabled	0 - Disabled 1 – Enabled Default: Disabled

Enable Comms Writes (other than Control)
COMMS-1 - 0,1,2,3

COMMS-4: Comms Loss Fault	
Comm Loss Fault 4) Disabled	0 – Fault 1 – Stop (uses selected stop mode) 2 – Hold Speed Default: Disabled

Operating mode when communications signal is lost if Control or Reference is set to Comms;
COMMS-1 - 0,1,2,3

COMMS-5: Timeout	
Comm Loss Delay 5) 1.0s	Min: 0s Max: 120.0s Default: 1.0s

Time it takes to determine the loss of communication signal: COMMS-1 - 0,1,2,3

COMMS-6: RS-485 Baudrate	
RS485 Baud 6) 19200	0 - 9600 1 - 19200 2 - 38400 3 - 57600 4 - 76800 5 – 115200 Default: 19200

Baud Rate
COMMS-1 - 0,2

COMMS-7: RS-485 Parity Stop	
Modbus RTU 7) None	0 - None, 2 Stop 1 - Even, 1 Stop 2 - Odd, 1 Stop 3 – None, 1 Stop Default: None

Parity/Stop bits selection
COMMS-1 - 0,2

COMMS-9: ModBus RTU Address	
ModBus RTU Addr 9) 247	Min: 1 Max: 247 Default: 247

Modbus Device Address
COMMS-1 - 0,2

COMMS-10: BACnet MAC/ID	
BACNET MS/TP Node 10) 1	Min: 0 Max: 127 Default: 1

BACnet MAC/ID
COMMS-1 - 2,3

COMMS-11: BACnet MS TP Max Master	
BACNET MS TP Max Mstr 11) 127	Min: 0 Max: 127 Default: 127

BACnet Max Master
COMMS-1 - 2,3

COMMS-12: BACnet Device Instance	
BACNET Instance 12) 223000	Min: 0 Max: 4194303 Default: 223000

BACnet Device Instance (0-4194303, default 2230000) COMMS-1 - 2,3

Comms-27–30

These parameters are only accessible through remote communications (Modbus/BACnet) and are used to control VFD operation. Comms Run/stop, Comms Command Frequency, and Comms PID Setpoint must be enabled from their associated settings before being used (Primary-24, Primary-23, Primary-41, Primary-42, Primary-47).

COMMS-27: Comms Run/Stop	
Run/Stop 27) Stop	0 - Stop 1 – Run Default: Stop

COMMS-28: Comms Commend Frequency	
N/A 28) 15Hz	Min: Low Freq Limit Max: High Freq Limit Default: 15.00Hz

COMMS-29: Comms PID Setpoint	
N/A 29) 60 PSI	Min: 0 Max: [Prime-50] *0.95 Default: 60 [PSI]

COMMS-30: Comms Reset Fault	
N/A 30) None	0 - None 1 – Reset Default: None

COMMS-36: Bluetooth Enable	
Bluetooth Enable 36) Enable	0 - Disable 1 – Enable Default: Enable

Enable or disable the Bluetooth module. When disabled, device does not broadcast its presence.

8.7 View Information

VIEW-1: VFD Output Frequency	
Output Frequency 1)	Min: 0.0 Max: 240.00 [Hz]

Displays the VFD output frequency.

VIEW-2: Motor Speed	
Motor Speed 2)	Min: 0.0 Max: 3600 [RPM]

Displays the current RPM of the motor.

VIEW-3: Wattmeter	
Wattmeter 3)	Min: 0.0 Max: 4294967 [kWh]

Displays the current Wattage measurement.

VIEW-5: Average Output Current	
Average Current 5)	Min: 0.0 Max: 6x VFD FLA [A]

Displays the Average Output Current.

VIEW-6: Line U Current	
Line U Current 6)	Min: 0.0 Max: 6x VFD FLA [A]

Displays the Line U Current.

VIEW-7: Line V Current	
Line V Current 7)	Min: 0.0 Max: 6x VFD FLA [A]

Displays the line V Current.

VIEW-8: Line W Current	
Line W Current 8)	Min: 0.0 Max: 6x VFD FLA [A]

Displays the Line W Current.

VIEW-9: DC Bus Voltage	
DC Bus Voltage 9)	Min: 0.0 Max: 1000.0

Displays the DC bus voltage.

VIEW-10: Output Voltage	
Output Voltage 10)	Min: 0.0 Max: 600.0

Displays the VFD calculated output voltage (RMS).

VIEW-11: Output Status	
Output Status 11)	0 - VFD Off 1 - Accelerate 2 - Decelerate 3 - Steady 4 - Speed search 5 - Flying start 6 - DC output 7 - Preheat 8 - DC trip prevention 9 - Stall prevention 10 - Bypass off 11 - Bypass run

Displays the output status.

VIEW-12: System Status	
System Status 11)	0 - VFD stop 1 - VFD run 2 - VFD disabled 3 - VFD fault 4 - VFD shutdown 5 - VFD fireman's override 6 - VFD auto reset 8 - Power-on delay 12 - Signal loss 14 - PID run 15 - Open damper 18 - Bypass stop 19 - Bypass manual 20 - Bypass override 22 - Bypass auto on fault 23 - Bypass disabled 24 - Bypass fault 25 - Bypass shutdown 27 - Bypass auto on comms loss

Displays the current system operating status.

VIEW-13: Fault	
HOA Mode 13)	0 - None 1 - Motor Overload (C) 2 - Motor Over Current (C) 3 - VFD Over Current (C) 4 - VFD Over Heat (C) 5 - VFD Short Circuit (C) 6 - Over Voltage (L) 7 - Under Voltage (L) 8 - Input Phase Open (L) 9 - Output Phase Open (L) 10 - No Motor (L) 11 - Incorrect Output Wiring 12 - Power Board Uncalibrated 13 - Ground Fault (L) 21 - Bypass Motor Overload 22 - Bypass Phase Unbalance 23 - Bypass Phase Loss 24 - Bypass Board Error 25 - Bypass Stall 26 - Bypass Max Time 27 - Bypass Ground Fault 28 - Bypass Communications Error 29 - Bypass Contactor 30 - Bypass Current At Power On 31 - Bypass No Motor Current 32 - Bypass Locked Rotor 33 - Bypass Unexpected Current 34 - Bypass No Motor Current 41 - Limit Switch (H) 42 - Damper Overload (L) 43 - Control Reserved 44 - No Flow (L) 45 - External Trip (M) 46 - Power Board Error (M) 47 - Control Board Error (M) 48 - VFD Cooling Fan (L) 49 - Power Board Communications Error (M) 50 - Overpressure (A) (P) 51 - BMS Communications Loss (A) 52 - Analog Signal Loss
	53 - Transducer Signal Loss (A) 54 - EEPROM Error 55 - Calibration CRC Failed 56 - Bluetooth Key CRC Failed 57 - Invalid Firmware

Displays the fault type.

(C)- Critical type faults require long retry delay
(L)- Light type faults allow short retry delay
(M)- Faults require manual reset
(A)- Faults with Auto Reset/Restart abilities

At the end of Protection group there are separate retry parameters for (C) Critical and (L) Light faults.

VIEW-15: PID Feedback Value	
PID Feedback Value 15)	Min: 0 Max: 3000

Displays the current PID feedback value in selected units. (PSI, GPM, etc.)

VIEW-16: 2nd Input Value (Units)	
2nd Input Value 16)	Min: 0 Max: 3000

Analog input in selected units (decimals depend on selected unit)

VIEW-17: Inverter Temperature	
IGBT Temp 17)	Min: 0.0 Max: 160.0

Displays the current IGBT temperature in degrees C, and as percentage of IGBT temp rating.

VIEW-18: Ambient Temperature	
Ambient Temp 18)	Min: 0.0 Max: 160.0

VIEW-19: Power-On Time	
Power-On Time 19)	Min: 0 Max: 4294967295

Displays the system time most significant digits: YY/MM/DD/HH/MM

VIEW-21: Motor Run Time	
Motor Run Time 21)	Min: 0 Max: 4294967295

VIEW-23: D1-SG Input	
D1-SG Input 23)	0 - Open 1 - Closed

Displays status of Digital Input 1.

VIEW-24: D2-SG Input	
D2-SG Input 24)	0 - Open 1 - Closed

Displays status of Digital Input 2.

VIEW-25: V1-V2 Input	
V1-V2 Input 25)	0 - Deenergized 1 - Energized

Displays status of Voltage Input 1.

VIEW-26: V3-V4 Input	
V3-V4 Input 26)	0 - Deenergized 1 - Energized

Displays status of Voltage Input 2.

VIEW-27: O1-O2 Output	
O1-O2 Output 27)	0 - Open 1 - Closed

Displays status of Output Relay 1.

VIEW-28: HOA Status	
HOA Mode 28)	0 - Off 1 - Hand 2 - Auto 3 - Bluetooth

Displays status of HOA selector.

VIEW-32: 1A Input Voltage	
1A Input 32)	Min: 0.00 Max: 24.00

VIEW-34: 2A V Input	
2A V Input 34)	Min: 0.00 Max: 10.00

t

VIEW-37: Power	
Average Power 37)	Varies depending on VFD size [kW]

VIEW-39: Target Frequency	
Target Frequency 39)	Min: PRIMARY-10 Max: PRIMARY-9

VIEW-40: Run Command Source	
Run Command 40)	0 - None 1 - Run 2 -Terminals 3 - 3 Wire 4 - Communication 5 - Mobile

VIEW-41: Speed Reference Source	
Speed Reference 41)	0 - None 1 - Keypad 2 - Analog 1A 3 - Analog 2A 4 - Communication 5 - Mobile 6 - PID

VIEW-46: VFD Cooling Fan RPM	
Cooling Fan 46)	Min: 0 Max: 7200 [RPM]

VIEW-47: 1A Type	
N/A 47)	0 – 0-10V Input 1 – 4-20mA Input

States the current hardware configuration of the 1A Analog Input (DIP switch selection)

VIEW-48: 2A Type	
N/A 48)	0 – 0-10V Input 1 – 0-10V Output 2 – 4-20mA Output

States the current hardware configuration of the 2A Analog Input/Output (DIP switch selection)

VIEW-49: D3-SG Input	
2A Type 49)	0 - Open 1 - Closed

Displays status of Digital Input 3.

VIEW-50: D4-SG Input	
2A Type 50)	0 - Open 1 - Closed

Displays status of Digital Input 4.

VIEW-51: O3-O4 Output	
2A Type 51)	0 - Open 1 - Closed

Displays status of Relay Output 2 (N.C., form C).

VIEW-52: O4-O5 Output	
2A Type 52)	0 - Open 1 - Closed

Displays the status of Relay Output 2 (N.O., form C).

VIEW-53: 3A mA Input	
3A Input 53)	Read Only

Analog Input in mA.

VIEW-100: Bluetooth Key	
Bluetooth Key 100)	Default: XXXXXXXX

VIEW-116: Bluetooth MAC ID	
Bluetooth MAC ID 116)	Default: XXXXXXXXX

VIEW-128: Bluetooth Name	
Bluetooth Name 128)	Default: XXXXXXXXX

The Bluetooth name is the name that is being broadcast by the device. It is a portion of the Bluetooth key and is represented in base 36.

8.8 Fault Codes

FAULT-1: Fault	
Fault 1)	0 - None 1 - Motor Overload (C) 2 - Motor Over Current (C) 4 - VFD Over Heat (C) 8 - Input Phase Open (L) 9 - Output Phase Open (L) 10 - No Motor (L) 11 - Incorrect Output Wiring 12 - Power Board Uncalibrated 13 - Ground Fault (L) 21 - Bypass Motor Overload (L) 26 - Bypass Max Time (L) 27 - Bypass Ground Fault (L) 28 - Bypass Communications Error 29 - Bypass Contactor (L) 30 - Bypass Current at Power On (L) 31 - Bypass No Motor Current (L) 33 - Bypass Unexpected Current (L) 41 - Limit Switch 42 - Damper Overload (L) 43 - Control Reserved 44 - No Flow (L) 45 - External Trip (M) 47 - Control Board Error (M) 48 - VFD Cooling Fan (L) 50 - Overpressure (A) 51 - BMS Communications Loss (A) 52 - Analog Signal Loss 53 - Transducer Signal Loss (A) 54 - EEPROM Fail 55 - Calibration CRC Failed 56 - Bluetooth Key CRC Failed

Displays the fault type.

(C)- Critical type faults require long retry delay
(L)- Light type faults allow short retry delay
(M)- Faults require Reset4
(A)- Faults with Auto Reset/Restart abilities

At the end of Protection group there are separate retry parameters for (C) Critical and (L) Light faults

FAULT-4: Line U Current	
Line U Current 4)	Min: 0.0 Max: 6x VFD FLA (A)

Displays the phase A output current at the time of the fault. Displayed upon VFD fault.

FAULT-5: Line V Current	
Line V Current 5)	Min: 0.0 Max: 6x VFD FLA (A)

Displays the phase B output current at the time of the fault. Displayed upon VFD fault.

FAULT-6: Line W Current	
Line W Current 6)	Min: 0.0 Max: 6x VFD FLA (A)

Displays the phase C output current at the time of the fault. Displayed upon VFD fault.

FAULT-7: DC Bus Voltage 1	
DC Bus Voltage 1 7)	Min: 0.0 Max: 1000 (V)

Displays the DC bus voltage at time of the fault. Displayed and saved upon VFD fault.

FAULT-8: DC Bus Voltage 2	
DC Bus Voltage 2 8)	Min: 0.0 Max: 1000 (V)

Displays the DC bus voltage captured 100ms after the fault.

FAULT-9: Target Frequency	
Target Frequency 9)	Min: 0.0 Max: 240.00 (Hz)

Displays the target frequency at the time of the fault. Displayed upon VFD fault.

FAULT-10: Output Frequency	
Output Frequency 10)	Min: 0.0 Max: 240.00 (Hz)

Displays the output frequency at the time of the fault. Displayed upon VFD fault.

FAULT-12: System Status	
System Status 12)	0 - VFD stop 1 - VFD run 2 - VFD disabled 3 - VFD fault 4 - VFD shutdown 5 - VFD fireman's override 6 - VFD auto reset 8 - Power-on delay 12 - Signal loss 14 - PID run 15 - Open damper 18 - Bypass stop 19 - Bypass manual 20 - Bypass override 22 - Bypass auto on fault 23 - Bypass disabled 24 - Bypass fault 25 - Bypass shutdown 27 - Bypass auto on comms loss

Displays the operating mode at the time of the fault. Displayed upon VFD fault.

FAULT-11: Output Status	
Output Status 11)	0 - VFD Off 1 - Accelerate 2 - Decelerate 3 - Steady 4 - Speed search 5 - Flying start 6 - DC brake 7 - Preheat 8 - DC trip prevention 9 - Stall prevention 10 - Bypass off 11 - Bypass run

Displays the system output at the time of the fault.

FAULT-13: HOA Mode	
HOA Mode 13)	0 - Hand 1 - Off 2 - Auto 3 - Bluetooth

Displays status of the HOA switch at time of the fault. Displayed upon VFD or Bypass fault.

FAULT-14: VFD Input Terminals	
I/O Terminals 14)	Min: 0x00 Max: 0xFF

Bit field of flags representing terminal inputs at the time of the fault. For bits 0-1, a cleared flag will read "Open and a set flag will read "Closed". For bits 2-3, a cleared flag reads "De-Energized" and a set flag reads "Energized". Displayed upon VFD or Bypass fault.
Bit 0 - Damper Status
Bit 1 - O1O2 Status
Bit 2 - O3O4 Status
Bit 3 - O4O5 Status
Bit 10 - D4 Status
Bit 11 - D3 Status
Bit 12 - V3/V4 Status
Bit 13 - V1/V2 Status
Bit 14 - D2 Status
Bit 15 - D1 Status

FAULT-15: IGBT Temperature	
IGBT Temperature 15)	Min: 0 [°C] Max: 160 [°C]

Displays the current Inverter temperature in degrees C at the time of the fault. Displayed upon VFD fault.

FAULT-16: PCB Temperature	
Ambient Temperature 15)	Min: 0 [°C] Max: 160 [°C]

Displays the current PCB temperature in degrees C at the time of the fault. Displayed upon VFD fault.

FAULT-33: Date	
Date 33) DD/MM/YYYY	Display: Date of Fault

Displays the system date. Only the 3 least significant bytes are used. From least significant byte: day, month, year. Displayed upon VFD or Bypass fault.

FAULT-34: Time	
Time 33) HH:MM:SS	Display: Time of Fault

Displays the system time. Only the 3 least significant bytes are used. From least significant byte: second, hour, day. Displayed upon VFD or Bypass fault.

8.9 Administration

ADMIN-1: Reset Motor Run Time	
Motor Run Time 1)	0 - No 1 - Yes

Resets the run time.

ADMIN-2: Reset Wattmeter	
Wattmeter 2)	0 - No 1 - Yes

Resets the accumulated value of the wattmeter.

ADMIN-4: Product Type	
Product Type 4)	0 - VFD 1 – VFD-Bypass

Indicates if VFD only or VFD with Bypass.

ADMIN-5: VFD Model	
VFD Model 5)	0 - QLNK-003-DV 1 -QLNK-005-DV 2 -QLNK-009-DV 3 -QLNK-012-DV 4 -QLNK-017-DV 5 -QLNK-024-DV 6 -QLNK-028-DV

Indicates base VFD model number.

ADMIN-7: Contactor Model	
Contactor Model 7)	0 - NONE 1 - MRC - 9 2 - MRC - 12 3 - MRC - 18 4 - MRC - 22 5 - MRC - 32

Indicates contactor model on drives with Bypass.

ADMIN-8: Product Package SW Version	
N/A 10) XX.XX.XXY	XX.XX.XXY

Software versions use the format xx.xx.xxy, where xx is a number from 0-99 and y is a letter representing the release variant.

ADMIN-10: Power CPU SW Version	
Power Board 10)	See Product SW Version

ADMIN-12: Power CPU Bootloader SW Version	
Power Bootloader 12)	See Product SW Version

ADMIN-16: Control CPU Bootloader SW Version	
Control Bootloader 16)	See Product SW Version

ADMIN-18: Bypass CPU SW Version	
Bypass Board 18)	See Product SW Version

ADMIN-22: Option CPU SW Version	
Option Board 22)	See Product SW Version

ADMIN-24: Bluetooth CPU SW Version	
Bluetooth Module 24)	See Product SW Version

ADMIN-25: Bluetooth CPU SW Version	
Bluetooth Module 25)	See Product SW Version

ADMIN-30: Date/Time	
Date 30) DD/MM/YYYY	Date and time is formatted using the epoch time. This is the total number of seconds elapsed since 12:00 AM, January 1st, 1970.

ADMIN-30: Date/Time	
Time 30) HH:MM:SS	Date and time is formatted using the epoch time. This is the total number of seconds elapsed since 12:00 AM, January 1st, 1970

ADMIN-35: Serial Number	
Serial Number 30) XXXXXXXX	0 – 99,999,999

CHAPTER 9 - TROUBLESHOOTING AND MAINTENANCE

The following troubleshooting information is also available via the Q-Link mobile app. When a fault occurs, the mobile app will offer the same potential remedies seen below for the corresponding faults in section 9.1.

9.1 Fault Remedy

Fault	Cause	Remedy
Motor Overload (C)	A motor overload fault occurs when the overload sees more than the adjusted percentage of the FLA setting. This follows the industry-standard overload trip class curve, adjustable in PROTECTION-07 & 08.	• Check that your FLA setting in PRIMARY-04 matches the motor nameplate • For submersible pumps, check if there is a sand in the water. • Check motor shaft spins freely • For high inertia loads set higher acceleration time
Motor Over Current (C)	A motor overcurrent fault occurs when the overload sees more than the user-defined percentage of the FLA setting, adjustable in PROTECTION-12. This fault will trip after a short delay, adjustable in PROTECTION-13.	• Check that your ACC time is high enough to allow for proper motor ramp-up • Check that your FLA setting in PRIMARY-04 matches the motor nameplate • Verify motor winding connections in junction box according manufacturer drawing.
- VFD Over Current (C)	A VFD overcurrent fault occurs when the overload sees more than 110% of the VFD's current rating. This is an instantaneous fault.	• Check that your ACC time is high enough to allow for proper motor ramp-up • Check that your VFD is sized correctly to the motor load • For submersible pumps, check that your motor max amps do not exceed the VFD's current rating. • Check for an obstruction at the motor
VFD Over Heat (C)	A VFD overheat fault occurs when VFD's internal heat sink temperature limit is exceeded. This is an instantaneous fault.	• Check that the VFD fan vents are free of dirt and debris • Check that the enclosure is providing adequate cooling air flow to the VFD

Fault	Cause	• Remedy
VFD Short Circuit (C)	A VFD short circuit fault occurs when there is an internal or external short circuit on the VFD output circuit. This is an instantaneous fault.	• Check if power line wiring is connected to VFD motor terminals • Check that there are no shorts visible on the output circuit of the VFD • Disconnect the motor wires at the VFD, disable the no motor protection in PROTECTION-03, and run the VFD with no load. If problem persists, then the VFD output is shorted internally. Consider replacing the VFD and don't forget to check the motor circuit also for shorts. This may have caused the damage and could possibly damage a newly installed VFD if not corrected. • Check that there are no shorts in the wires running between your VFD and the motor
Over Voltage (L)	A VFD over voltage fault occurs when the VFD's internal DC bus voltage limit is exceeded. This is an instantaneous fault.	• Check that the measured line voltage matches the VFD rated voltage • Check that the DEC time is adequately high to allow for slow ramp-down of the motor load. Decelerating too quickly can create harmful regenerative voltage. • For fans and other high-inertia applications, it's best to use the "coast" stopping mode selectable in PRIMARY-30 to allow for gradual motor slowing • For very high-inertia loads, consider installing a dynamic braking unit and braking resistor to absorb any excess regenerative voltage

Fault	Cause	• Remedy
Under Voltage (L)	A VFD under voltage fault occurs when the VFD's internal DC bus voltage low limit has not been met.	• Check that the measured line voltage matches the VFD rated nominal voltage • Check your motor wiring • Check the VFD's DC bus value before running a motor and while running a motor. If the voltage drops after a motor load has been applied, there may be a motor issue. • Disconnect the motor wires at the VFD, disable the no motor protection in PROTECTION-03, and run the VFD with no load. If problem persists, then the VFD may have internal damage. • Check the motor with a megger meter. If the motor tests fine, the VFD works fine with no load, and the DC bus still drops when a load is applied, check the line voltage to see if it may be an overloaded utility transformer causing the issue. If the line voltage is fine, consider replacing the VFD.
Input Phase Open (L)	Occurs when: The amplitude of DC bus ripples exceeds a set value.	• Ensure all wires of the input (R, S, and T) are properly torqued. • Ensure the VFD is receiving proper input Voltage to each phase. • Ensure the utility power transformer is properly sized for VFD load.
Output Phase Open (L)	Occurs when: Any of the output phases (U, V or W) has current less than the Output Phase Open Level (Protect-19).	• Check contactor at VFD output. • Check output wiring (U, V, and W) from VFD to motor. • Check motor disconnect if installed
No Motor (L)	Occurs when: All three phases have current below 15% of motor FLA for 250ms. Motor circuit is open or has loose connection.	• Ensure Motor wires are properly torqued and wired to U, V, and W. • Ensure output disconnect is turned one if a disconnect is installed between VFD and Motor. • If the VFD is being tested without a motor, ensure Protect-03 is No.

Fault	Cause	• Remedy
Ground Fault (L)	Occurs when: Ground fault current exceeds the internal ground fault level value.	• Ensure Motor and VFD are grounded per the installation guide. • Disconnect motor wires from package and Check the output wiring and insulation of motor windings with Megger tester.
Bypass Motor Overload	The Bypass Motor Overload protection provides motor overload protection when in Bypass mode only. If the motor pulls more current than set motor FLA, it will trip based on selected trip class to prevent motor damage.	• Check FLA, Trip Class, • Check if motor is overloaded
Bypass Phase Loss	The bypass did not see current in one or more of the phases.	• Check wiring passing through the bypass current sensors for loose connections.
Bypass Board Error	The bypass board error is a “hard fault” and requires that the board be power cycled to clear it.	• If Power cycle does not clear the fault, please consult factory
Bypass Stall	The Stall fault occurs when the current exceeds 300% of set FLA for 0.5 sec and the current slope is not decreasing. (Not active during startup).	• Check FLA settings. • Check if motor is overloaded. • Check for mechanical issues (bad bearings, bad gears or belts) • If nothing helps Adjust stall level higher. (Default is 300%)
Bypass Max Time to Start	A max time to start trip occurs if the motor current has not decreased below FLA 10 seconds after start.	• Check that your FLA setting in PRIMARY-04 matches the motor nameplate • Check the motor and system for mechanical issues • Check your dip switch settings • Check power wiring for loose connection.
Bypass Ground Fault	A Ground Fault occurs when bypass module determines that there is a motor ground leak current.	• Disconnect motor leads from bypass package and test insulation with Megger • If Megger reading shows low insulation, check motor wiring and motor junction box for damaged wire insulation and moisture

Fault	Cause	• Remedy
Bypass Communications Error	Bypass communication error occurs when the Bypass and I/O board loses the connection between them.	• Check the connection between the Bypass board and the I/O board, that the connector is firm and that it is in the correct socket. • Also check condition of wire that there are no insolation issues along it's length.
Bypass Contactor	A Bypass Contactor trip occurs when there is an issue with the contactors. It usually indicates that either motor is disconnected or contactor didn't pull in or contactor coil pulls too much current and activated 24VDC power overload protection or it is disconnected.	• Check that a motor is hooked up to the contactor output. • Ensure contactor is FCS brand and properly sized for application • Check for contactor coil connection to bypass board • Check for shorts in the contactor coil or in the wiring to the contactor. • Disconnect contactor coil and check voltage coming from control board. If during bypass run mode there is no voltage, stop bypass and wait for a few minutes for overload to cooldown and check again 24VDC power during run mode.
Bypass Current at Power On	Bypass measures the current at power on with the contactors open, if there is current (>0) this fault is triggered.	• Check for proper motor wiring through the Bypass current sensors. • Check for contactor that is locked closed. • Check for proper calibration of the bypass unit.
Bypass No Motor Current	Bypass measures the current when in running state. If there is no measured current (0) then this fault is triggered.	• Check for proper motor wiring through the Bypass current sensors. • Check for contactor that is locked open. • Check for proper calibration of the bypass unit.
Bypass Locked Rotor	A locked rotor fault occurs when during start current exceeds 300% of the FLA setting and it is not decreasing after 0.5 seconds.	• Check that your FLA setting in PRIMARY-04 matches the motor nameplate • Check if the motor spins freely or if motor shaft is locked. • Check wiring in motor junction box. • Check phase sequence for proper rotation direction for systems with mechanically blocked reverse rotation. • Monitor PF (Power Factor) reading at start. If it is less than 0.2 and does not change, call tech support to check wiring.

Fault	Cause	• Remedy
Limit Switch	Occurs when: The Damper Switch input is not detected within an adjustable time delay (VFD-07) when using Damper Mode (VFD-06).	• Ensure a Damper switch is being used and wired to appropriate Digital Input set for Damper Switch. Ensure the Damper Time Delay (VFD-07) is set to a longer time than it normally takes to open the Damper and close the Damper Switch.
Damper Overload (L)	Occurs when: The Damper current exceeds 0.5A	• Ensure rating of the Damper Motor does not exceed 0.5A • Ensure Damper is not blocked or stuck and is free-moving.
No Flow (L)	When flow switch is open for time delay during no flow condition in VFD run mode, VFD will trip.	• Check if time delay is not long enough to provide flow during start • Check if there is a suction pressure or water in well. • Check if pump did not fail
- External Trip (M)	Occurs when: any digital input set for EXT TRIP is activated.	• Resolve reason for external trip signal. • Disconnect trip signal connection to digital input.
Power Board Error (M)	Indicates a problem with the power board.	• Consult factory
Control Board Error (M)	Indicates a problem with the firmware. When it happens, the control board reboots and this faults immediately.	• Consult factory
VFD Cooling Fan (L)	Fan is either unplugged, damaged, or has slowed down significantly	• Check it's plugged in, clean it, or replace it. Fan is rated at 3800 RPM and the fault triggers below 2280.
Power Board Communications Error (M):		• Consult factory
Overpressure (A)	Occurs when: System pressure exceeds over pressure trip level setting.	• Check over pressure level in: Primary-64 • Can be caused by pressure overshooting because P-Gain setting is too high. Decrease P-Gain value if necessary. • Check if pump is oversized for the application and demand changes rapidly.
BMS Communications Loss (A)	Occurs when: Run Command Source or Speed Source is set to Comms, and the signal is not detected	• Check wiring and signal from BMS system to VFD • Verify that BMS is sending proper run command and/or speed signal

Fault	Cause	• Remedy
Analog Signal Loss (A)	Occurs when speed signal is less than minimum value for Speed Reference Signal Loss Delay Time	• Check wiring and speed signal to VFD • Check Min Value: I/O-14, I/O-19, I/O-24 • Check signal Loss Delay: PRIMARY-45
Transducer Signal Loss (A)	Occurs when: signal is below minimum value OR at maximum value for Feedback Loss Delay time.	• Verify wiring and signal from transducer • Check signal input value: VIEW-31, VIEW-35 (4-20 mA) or VIEW-32, VIEW-34 (0-10V) • Check Min Value: I/O-14, I/O-19, I/O-24 • Check signal Loss Delay: PRIMARY-62
EEPROM Fail		• Consult factory
Calibration CRC Failed		• Consult factory
Bluetooth Key CRC Failed		• Consult factory
Invalid Firmware	Occurs when software in power, control, and bypass boards are not compatible.	• Download firmware package from the Q-Link Companion App

9.2 Fan Replacement

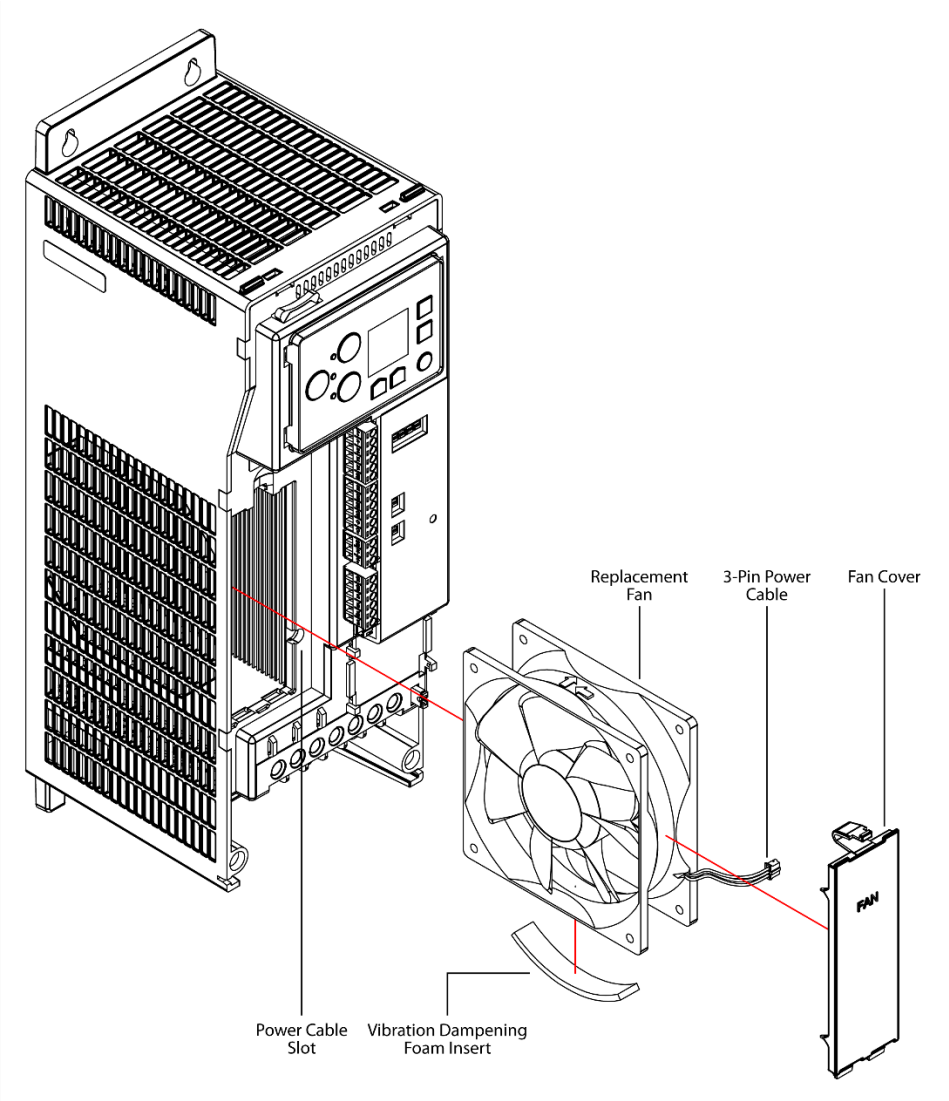

9.3 Battery Replacement

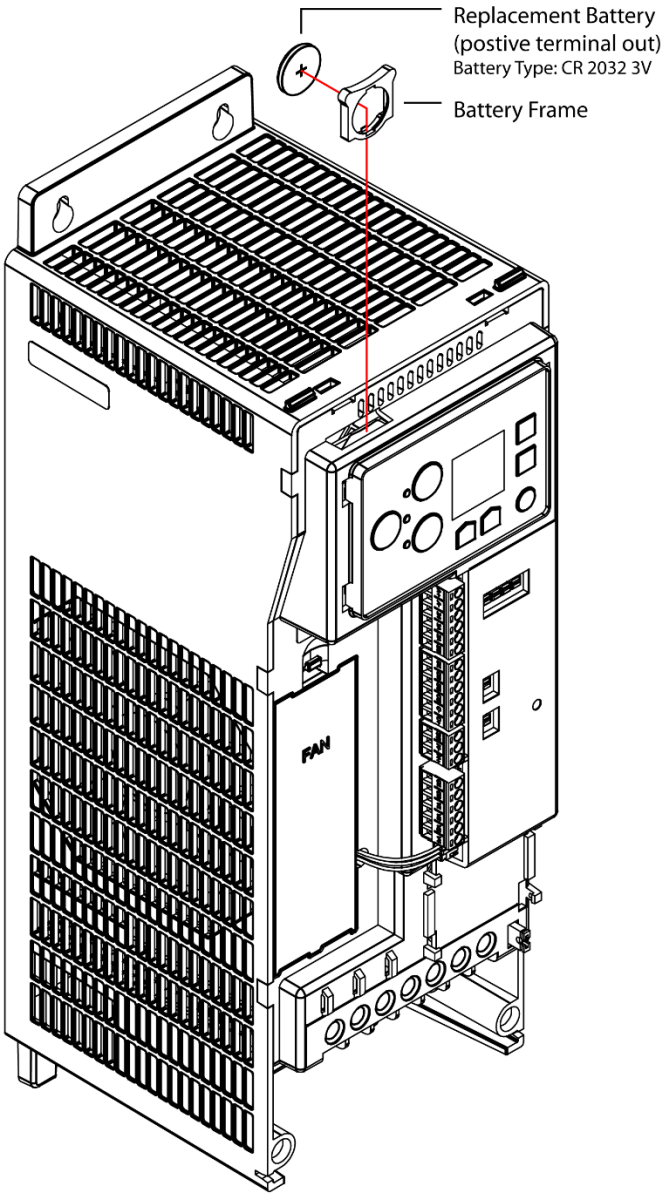

CHAPTER 10 - MODBUS- RTU COMMUNICATION

10.1 Introduction

The VFD can be controlled and monitored through the Modbus RTU protocol over an RS-485 connection. Modbus follows a simple client-server model. Server devices perform data read/write requests which are issued from a client device such as a PLC or building management system. Assignable addresses for server devices range from an address of 1 to a theoretical maximum of 247.

As a server device, the VFD communicates all data using only 16-bit holding registers. Addressing for the registers is partitioned into blocks that are multiples of 100 to group functionally similar data. If the drive is configured to accept commands via remote communications, it can be commanded to start, stop, run at a specified output frequency, target a setpoint in PID control, and reset faults.

Modbus addresses can be found in Chapter 7 – Parameter Lists

CHAPTER 11 - BACnet- MS/TP COMMUNICATION

11.1 Introduction

The VFD can be controlled and monitored through the BACnet MS/TP protocol over an RS-485 connection. The VFD operates as an MS/TP master device, which the protocol can support addressing for up to 128 master devices in a single MS/TP network.

BACnet conveys control and monitoring data as a collection of BACnet objects. The VFD supports Analog Input, Analog Value, Positive Integer Value, Binary Input, Multi-State Value, and Character String object types. The Read Property and Write Property services can be used to interface to these objects. If the drive is configured to accept commands via remote communications, it can be commanded to start, stop, run at a specified output frequency, target a setpoint in PID control, and reset faults.

11.2 Parameter Code Lists

Analog Input Object:

BACnet Object Instance	Read/ Write	Full Parameter Name	OLED Display Name	Units	Parameter Setting Range
0	R	PID Feedback Value	PID Feedback	0.1 [Unit]	0.0 to 6000.0
1	R	2nd Input Value (Units)		[Unit]	0.0 to 3000.0/ 0.00 to 3000.00
2	R	Inverter temperature	IGBT Temp	[°C]/ %	0 to 160 /0-100
3	R	PCB temperature	Ambient Temp	[°C]	0 to 160
4	R	1A mA Input		mA * 100	N/A (Read only)
5	R	1A V Input	1A Input	x	0.00 to 24.00
6	R	2A V Input	2A Input	x	0.00 to 10.00
7	R	2A mA Output		x	.00 to 20.00
8	R	2A V Output		x	0.00 to 10.00
9	R	Power	Average Power	[kW]	varies depending on VFD size
10	R	3A mA Input	3A Input	mA * 100	N/A - Read only

Analog Value Object:

BACnet Object Instance	Read/ Write	Full Parameter Name	OLED Display Name	Units	Parameter Setting Range
0	R/W	Rated Motor Voltage	Motor Voltage	[V]	200/400V model: 200 to 480V; def 230V 400V model: 380 to 480V; def 460V
1	R/W	Rated Motor HP/kW	Motor Horsepower	[HP/kW]	1 to 600HP/ 0.75 to 450kW
2	R/W	Rated Motor Current	Motor Current	0.1 [A]	1.0 to VFD Rating
3	R/W	Maximum Frequency	Max Frequency	0.01 [Hz]	30.00 to 240.00
4	R/W	Base Frequency	Base Frequency	0.01 [Hz]	30.00 to VFD Max Hz
5	R/W	High Frequency Limit	High Frequency Limit	0.01 [Hz]	VFD Low Hz Limit to VFD Max Hz
6	R/W	Low Frequency Limit	Low Frequency Limit	0.01 [Hz]	0.50 to VFD High Hz Limit
7	R/W	Carrier Frequency	Carrier Frequency	0.1 [kHz]	2.0 to 10.0
8	R/W	Keypad Frequency	Keypad Frequency	0.01[Hz]	VFD Low Hz to VFD High Hz Limit
9	R/W	Power-On Run Delay	Power-On Run Delay	1[Sec]	0 to 9999
10	R/W	Acceleration Time	Acceleration Time	0.1 [sec]	1.0 to 6000.0
11	R/W	Deceleration Time	Deceleration Time	0.1 [sec]	1.0 to 6000.0
12	R/W	Ref. Loss Delay**	Anlg Ref Loss	1[Sec]	0 to 20
13	R/W	PID Feedback Max*	Feedback Max	0.01 [Unit]	0.0 to 6000.0
14	R/W	PID Keypad Setpoint*	Keypad Setpoint	0.01 [Unit]	0.0 to 95% of [PID F/B Max]
15	R/W	PID P-Gain*	P Gain	1 [%]	0 to 999
16	R/W	PID I-Gain*	I Gain	0.1 [sec]	0.1 to 32.0
17	R/W	PID Out Ramp Time*	PID Ramp Time	0.1 [sec]	0.0 to 10.0
18	R/W	PID High Frequency Limit *	PID High Freq Limit	0.01 [Hz]	[Prime-59] to [Prime-07]
19	R/W	PID Low Frequency Limit *	PID Low Freq Limit	0.01 [Hz]	0.00 to [Prime-58]
20	R/W	Skip Frequency 1 Low*	Skip Freq 1 Low	0.01 [Hz]	0.50 to [Skip-1 High Hz]
21	R/W	Skip Frequency 1 High*	Skip Freq 1 High	0.01 [Hz]	[Skip-1 Low Hz] to [VFD Max Hz]

BACnet Object Instance	Read/ Write	Full Parameter Name	OLED Display Name	Units	Parameter Setting Range
22	R/W	Skip Frequency 2 Low*	Skip Freq 2 Low	0.01 [Hz]	0.50 to [Skip-2 High Hz]
23	R/W	Skip Frequency 2 High*	Skip Freq 2 High	0.01 [Hz]	[Skip-2 Low Hz] to [VFD Max Hz]
24	R/W	Skip Frequency 3 Low *	Skip Freq 3 Low	0.01 [Hz]	0.50 to [Skip-3 High Hz]
25	R/W	Skip Frequency 3 High *	Skip Freq 3 High	0.01 [Hz]	[Skip-3 Low Hz] to [VFD Max Hz]
26	R/W	Preset Frequency-A	Speed A	0.01 [Hz]	VFD Low Hz Limit to VFD Max Hz
27	R/W	Preset Frequency-B	Speed B	0.01 [Hz]	VFD Low Hz Limit to VFD Max Hz
28	R/W	Preset Frequency-AB	Speed AB	0.01 [Hz]	VFD Low Hz Limit to VFD Max Hz
29	R/W	Preset Setpoint-A	Setpoint A	0.1/0.01 [Unit]	0.00 to F/B Max Value*0.95
30	R/W	Preset Setpoint-B	Setpoint B	0.1/0.01 [Unit]	0.00 to F/B Max Value*0.95
31	R/W	Preset Setpoint-AB	Setpoint AB	0.1/0.01 [Unit]	0.00 to F/B Max Value*0.95
32	R/W	1A mA Min Value	1A Input Min mA	0.01 [mA]	0.00 to 20.00
33	R/W	1A Min Hz	1A Min Hz	0.01 [Hz]	0.00 to [Prime-07]
34	R/W	1A mA Max Value	1A Input Max mA	0.01 [mA]	0.00 to 20.00
35	R/W	1A Max Hz	1A Max Hz	0.01 [Hz]	0.00 to [Prime-07]
36	R/W	1A V Min Value	1A Input Min V	0.01 [V]	0.00 to 10.00
37	R/W	1A V Max Value	1AInput Max V	0.01 [V]	0.00 to 10.00
38	R/W	2A V Input Min Value	2A Input Filter	0.01 [V]	0.00 to 10.00
39	R/W	2A V Input Min Hz	2A Min Hz	0.01 [Hz]	0.00 to [Prime-07]
40	R/W	2A V Input Max Value	2A Input Max V	0.01 [V]	0.00 to 10.00
41	R/W	2A V Input Max Hz	2A Max Hz	0.01 [Hz]	0.00 to [Prime-07]
42	R	VFD Output Frequency	Output Frequency	0.01 [Hz]	0.00 to 240.00

BACnet Object Instance	Read/ Write	Full Parameter Name	OLED Display Name	Units	Parameter Setting Range
43	R	Average Output Current	Average Current	0.1 [A]	0.0 to 6xVFD FLA
44	R	Line U Current	Line U Current	0.1 [A]	0.0 to 6xVFD FLA
45	R	Line V Current	Line V Current	0.1 [A]	0.0 to 6xVFD FLA
46	R	Line W Current	Line W Current	0.1 [A]	0.0 to 6xVFD FLA
47	R	DC Bus Voltage	DC Bus Voltage	0.1 [V]	0 to 1000
48	R	Output Voltage	Output Voltage	0.1 [V]	0 to 600
49	R/W	Timeout	Com Loss Delay	0.1 [sec]	0.1 to 120.0
50	R/W	Comms. Command Frequency			Min Freq Limit to High Freq Limit
51	R/W	PID Setpoint			0.0 to 95% of [PID Feedback Max]
70	R	Target Frequency	Target Frequency	Hz	Min Freq Limit to High Freq Limit
71	R/W	Torque Boost Level	Torque Boost Level	0.01[%]	0.00 to 15.00
72	R/W	Motor OC Delay	Overcurrent Delay	0.1 [sec]	0.1 to 5.0
73	R/W	3A mA Min Value	3A Input Min mA	0.01 [mA]	0.00 to 20.00
74	R/W	3A Min Hz	3A Min Hz	0.01 [Hz]	0.00 to [Prime-07]
75	R/W	3A mA Max Value	3A Input Max mA	0.01 [mA]	0.00 to 20.00
76	R/W	3A Max Hz	3A Max Hz	0.01 [Hz]	0.00 to [Prime-07]

Binary Input Object:

BACnet Object Instance	Read/ Write	Full Parameter Name (manual)	OLED Display Name	Units	Parameter Setting Range
0	R	D1-SG Status	D1-SG Input	x	0 - Open 1 - Closed
1	R	D2-SG Status	D2-SG Input	x	0 - Open 1 - Closed
2	R	V1-V2 Status	V1-V2 Input	x	0 - Deenergized 1 - Energized
3	R	V3-V4 Status	V3-V4 Input	x	0 - Deenergized 1 - Energized
4	R	D3-SG Status	D3-SG Input	x	0 - Open 1 - Closed
5	R	D4-SG Status	D4-SG Input	x	0 - Open 1 - Closed
6	R	O1-O2 Status	O1-O2 Output	x	0 - Open 1 - Closed
7	R	O3-O4 Status	O3-O4 Output	x	0 - Open 1 - Closed
8	R	O4-O5 Status	O4-O5 Output	x	0 - Open 1 - Closed

Character String Object:

BACnet Object Instance	Read/ Write	Full Parameter Name	OLED Display Name	Units	Parameter Setting Range
0	R	Product Package SW Version		x	Software versions use the format xx.xx.xxy, where xx is a number from 0-99 and y is a letter representing the release variant.
1	R	Power CPU SW Version	Power Board	x	See Product SW Version
2	R	Power CPU Bootloader SW Version	Power Bootloader	x	See Product SW Version
3	R	Control CPU SW Version		x	See Product SW Version
4	R	Control CPU Bootloader SW Version	Control Bootloader	x	See Product SW Version
5	R	Bypass CPU SW Version	Bypass Board	x	See Product SW Version
6	R	Bypass CPU Bootloader SW Version		x	See Product SW Version
7	R	Bluetooth CPU SW Version	Bluetooth Module	x	See Product SW Version

Multi-State Objects:

BACnet Object Instance	Read/ Write	Full Parameter Name	OLED Display Name	Units	Parameter Setting Range
0	R/W	Application	Application	x	0- Basic 1- Supply Fan 2- Exhaust Fan 3- Cooling Twr 4- Surface/Booster Pump
1	R/W	Power Line Frequency	Line Frequency	x	0- 50 [Hz] 1- 60 [Hz]
2	R/W	Power-On Run	Power-On Run	x	0 - Disable 1 - Enable
3	R/W	Run after Fault Reset	Fault Reset & Run	x	0 - Disable 1 - Enable
4	R/W	Start Mode	Start Mode	x	0 - Accelerate 1 - DC Start 2 - Flying Start
5	R/W	DC Start Level *	DC Start Level	x	0 - Low 1 - Medium 2 - High
6	R/W	HOA Type	HOA Type	x	0- Keypad HOA 1- Auto Only 2- Keypad Off/Auto 3- External HOA
7	R	HOA Status	HOA Mode	x	0 - Off 1 - Hand 2 - Auto 3 - Bluetooth
8	R/W	Run Command in Hand	Hand Run Cmd	x	0- HOA in Hand 1- Terminal 2- 3-Wire 3- Comms
9	R/W	Speed Reference in Hand	Hand Speed Ref	x	0- Keypad 1- 1A Analog Input 2- 2A Analog Input 3- Communications 4 - 3A Analog Input
10	R/W	Stop Mode	Stop Mode	x	0 - Decel 1 - Coast 2 - DC Brake
11	R/W	V/F Control Mode	V/F Control	x	0 - Linear 1 - Squared
12	R/W	Run Command in Auto	Auto Run Cmd	x	0 - HOA in Auto 1 - Terminal 2 - 3-Wire 3 - Comms

BACnet Object Instance	Read/ Write	Full Parameter Name	OLED Display Name	Units	Parameter Setting Range
13	R/W	Speed Reference in Auto	Auto Speed Ref	x	0 - Keypad 1 - 1A Analog Input 2 - 2A Analog Input 3- Comms 4 - PID*
14	R/W	Reference Loss Condition	Anlg Ref Loss	x	0 - Disabled 1 - Below 1/2 of Min** 2 - Below Min**
15	R/W	Ref. Loss Action**	Anlg Ref Loss Act	x	0 – Fault 1 – Stop (uses selected stop mode) 2 – Hold Speed
16	R/W	PID Mode Select*	PID Mode	x	0 - Direct 1 - Inverse
17	R/W	PID Setpoint Source*	Setpoint Source	x	0 - Keypad 1 - 1A Analog Input 2 - 2A Analog Input 3 - Comms
18	R/W	PID Feedback Source*	Feedback Source	x	0 - 1A Input 1 - 2A Input
19	R/W	PID Feedback Unit*	Feedback Units	x	0 - PSI 1 - GPM 2 - inWC 3 - CFM 4 - inHg 5 - Feet 6 - °F 7 - mBar 8 - Pa 9 - kPa 10 - Meters 11 - °C 12 - Custom 13 - %
20	R/W	Feedback Signal Loss *	Fdbk Loss	x	0 - Disabled 1 - Below 1/2 of Min 2 - Below Min
21	R/W	Feedback Loss Action *	Fdbk Loss Action	x	0 – Fault 1 – Stop (uses selected stop mode) 2 – Hold Speed
22	R/W	Auto Bypass Selection	Auto Bypass	x	0 - Disabled 1 - On VFD Fault 2 - Bypass Comms Loss 3 - VFD Fault & Bypass Comms Loss
24	R/W	Damper	Damper Control	x	0 - Disabled 1 - Damper*

BACnet Object Instance	Read/ Write	Full Parameter Name	OLED Display Name	Units	Parameter Setting Range
25	R/W	Skip Frequency 1 Selection	Skip Freq 1 Enable	x	0 - Disabled 1 - Enabled*
26	R/W	Skip Frequency 2 Selection	Skip Freq 2 Enable	x	0 - Disabled 1 - Enabled*
27	R/W	Skip Frequency 3 Selection	Skip Freq 3 Enable	x	0 - Disabled 1 - Enabled*
28	R/W	VFD Motor Overload (MOL) Class	VFD MOL	x	0 - Class 5 1 - Class 6 2 - Class 10 3 - Class 20
29	R/W	Bypass Motor Overload (MOL) Class	Bypass MOL	x	0 - Class 5 1 - Class 6 2 - Class 10 3 - Class 20
30	R/W	Dry Input 1 Function	D1-SG Function	x	0 - None 1 - Enable 2 - Fireman's Override 3 - Speed- A 4 - Speed- B 5 - Setpoint-A 6 - Setpoint-B 7 - Damper LSW 9 - External Trip 10 - Run Forward 13 - 3-Wire Start 14 - 3-Wire Stop 15 - HOA Auto 16 - HOA Hand 17 - Shutdown 18- Fault Reset 19- Bypass
31	R/W	Dry Input 1 Contact	D1-SG Input		0 - Normally Open 1 - Normally Closed

BACnet Object Instance	Read/ Write	Full Parameter Name	OLED Display Name	Units	Parameter Setting Range
32	R/W	Dry Input 2 Function	D2-SG Function	x	0 - None 1 - Enable 2 - Fireman's Override 3 - Speed- A 4 - Speed- B 5 - Setpoint-A 6 - Setpoint-B 7 - Damper LSW 9 - External Trip 10 - Run Forward 13 - 3-Wire Start 14 - 3-Wire Stop 15 - HOA Auto 16 - HOA Hand 17 - Shutdown 18- Fault Reset 19- Bypass
33	R/W	Dry Input 2 Contact	D2-SG Input		0 - Normally Open 1 - Normally Closed
34	R/W	Wet Input 1 Function	V1-V2 Function	x	0 - None 1 - Enable 2 - Fireman's Override 3 - Speed- A 4 - Speed- B 5 - Setpoint-A 6 - Setpoint-B 7 - Damper LSW 9 - External Trip 10 - Run Forward 13 - 3-Wire Start 14 - 3-Wire Stop 15 - HOA Auto 16 - HOA Hand 17 - Shutdown 18- Fault Reset 19- Bypass
35	R/W	Wet Input 1 Type	V1-V2 Input		0 - Active High 1 - Active Low

BACnet Object Instance	Read/ Write	Full Parameter Name	OLED Display Name	Units	Parameter Setting Range
36	R/W	Wet Input 2 Function	V3-V4 Function	x	0 - None 1 - Enable 2 - Fireman's Override 3 - Speed- A 4 - Speed- B 5 - Setpoint-A 6 - Setpoint-B 7 - Damper LSW 9 - External Trip 10 - Run Forward 13 - 3-Wire Start 14 - 3-Wire Stop 15 - HOA Auto 16 - HOA Hand 17 - Shutdown 18- Fault Reset 19- Bypass
37	R/W	Wet Input 2 Type	V3-V4 Input		0 - Active High 1 - Active Low
38	R/W	Relay Output Select	O1-O2 Function	x	0 - Fault 1 - Run 2 - Proof of Run
39	R/W	Relay Contact	O1-O2 Output	x	0 - Normally Open 1 - Normally Closed
40	R/W	1A Input Filtering Level	1A Input Filter	x	0 - Low 1 - Medium 2 - High
41	R/W	2A V Input Filtering Level	2A Input Filter	x	0 - Low 1 - Medium 2 - High
42	R/W	2A Output Selection	2A Function	x	0 - Output Frequency 1 - Output Current 2 - DC Bus Voltage
43	R/W	Pre-Heat Mode	Preheat Mode	x	0 - Disabled 1 - Low Heat 2 - Medium Heat 3 - High Heat
44	R/W	No Motor Trip Selection	No Motor Fault	x	0 - Disable 1 - Enable
45	R/W	Stall Prevention	Stall Prevention	x	0 - Disable 1 - Enable
46	R/W	Protocol	Protocol	x	0 - Modbus RTU 2 - BACnet MS/TP
47	R/W	Write Access	Write Access	x	0 - Disabled 1 - Enabled

BACnet Object Instance	Read/ Write	Full Parameter Name	OLED Display Name	Units	Parameter Setting Range
48	R/W	Comms Loss Action	Com Loss Action	x	0 – Fault 1 – Stop (uses selected stop mode) 2 – Hold Speed
49	R/W	Parity/Stop Bits	Modbus RTU	x	0 - None, 2 Stop 1 - Even, 1 Stop 2 - Odd, 1 Stop 3 - None, 1 Stop
50	R/W	Bluetooth Enable	Bluetooth	x	0 - Disable 1 - Enable
51	R	Output Status	Output Status		0 - VFD Off 1 - Accelerate 2 - Decelerate 3 - Steady 4 - Speed search 5 - Flying start 6 - DC Output 7 - Preheat 8 - DC trip prevention 9 - Stall prevention 10 - Bypass off 11 - Bypass run
52	R	System Status	System Status	**x**	0 - VFD stop 1 - VFD run 2 - VFD disabled 3 - VFD fault 4 - VFD shutdown 5 - VFD fireman's override 6 - VFD auto reset 8 - Power-on delay 12 - Signal loss 14 - PID run 15 - Open damper 18 - Bypass stop 19 - Bypass manual 20 - Bypass override 22 - Bypass auto on fault 23 - Bypass disabled 24 - Bypass fault 25 - Bypass shutdown 27 - Bypass auto on comms loss
56	R/W	Run/Stop			0 - Stop 1 - Run
57	R/W	Reset Fault			0 - None 1 - Reset
58	W	Reset User Settings		x	0 - No 1 - Factory Defaults
60	R/W	Reset Motor Run Time	Motor Run Time	x	0 - No 1 - Yes

BACnet Object Instance	Read/ Write	Full Parameter Name	OLED Display Name	Units	Parameter Setting Range
61	R/W	Reset Wattmeter	Wattmeter	x	0 - No 1 - Yes
62	R	Fault		**x**	0 - None 1 - Motor Overload (C) 2 - Motor Over Current (C) 3 - VFD Over Current (C) 4 - VFD Over Heat (C) 5 - VFD Short Circuit (C) 6 - Over Voltage (L) 7 - Under Voltage (L) 8 - Input Phase Open (L) 9 - Output Phase Open (L) 10 - No Motor (L) 11 - Incorrect Output Wiring 12 - Power Board Uncalibrated 13 - Ground Fault (L) 21 - Bypass Motor Overload 22 - Bypass Phase Unbalance 23 - Bypass Phase Loss 24 - Bypass Board Error 25 - Bypass Stall 26 - Bypass Max Time 27 - Bypass Ground Fault 28 - Bypass Communications Error 29 - Bypass Contactor 30 - Bypass Current At Power On 31 - Bypass No Motor Current 32 - Bypass Locked Rotor 33 - Bypass Unexpected Current 34 - Bypass No Motor Current 41 - Limit Switch (H) 42 - Damper Overload (L) 43 - Control Reserved 44 - No Flow (L) 45 - External Trip (M) 46 - Power Board Error (M) 47 - Control Board Error (M) 48 - VFD Cooling Fan (L) 50 - Overpressure (A) (P) 51 - BMS Communications Loss (A) 52 - Analog Signal Loss 53 - Transducer Signal Loss (A) 54 - EEPROM Error 55 - Calibration CRC Failed 56 - Bluetooth Key CRC Failed 57 - Invalid Firmware 58 - Option board error

BACnet Object Instance	Read/ Write	Full Parameter Name	OLED Display Name	Units	Parameter Setting Range
69	R/W	Bypass Commanded		x	0 - No 1 - Yes
75	R	Run Command Source	Run Command	x	0 - None 1 - Run 2 -Terminals 3 - 3 Wire 4 - Communication 5 - Mobile
76	R	Speed Reference Source	Speed Reference	x	0 - None 1 - Keypad 2 - Analog 1A 3 - Analog 2A 4 - Communication 5 - Mobile 6 - PID
77	R	1A Type		x	0 - 0-10 V Input 1 - 4-20mA Input
78	R	2A Type		x	0 - 0-10 V Input 1 - 0-10 V Output 2 - 4-20mA Output
80	R/W	DC Trip Prevention	DC Trip Prevent	x	0 - Disabled 1 - Enabled
81	R/W	Torque Boost	Torque Boost	x	0 - Disable 1 - Enable
82	R	Product Type	Product Type	x	0 - VFD 1 - VFD-Bypass
83	R	VFD Model	VFD Model		0 - QLNK-003-DV 1 -QLNK-005-DV 2 -QLNK-009-DV 3 -QLNK-012-DV 4 -QLNK-017-DV 5 -QLNK-024-DV 6 -QLNK-028-DV
84	R	Contactor Model		x	0 - NONE 1 - MRC - 9 2 - MRC - 12 3 - MRC - 18 4 - MRC - 22 5 - MRC - 32
85	R/W	Option Board Enable	Option Board	x	0 - Disabled 1 - Enabled
86	R	Option Board Model		x	0 - None 1 - I/O Expansion

BACnet Object Instance	Read/ Write	Full Parameter Name	OLED Display Name	Units	Parameter Setting Range
87	R/W	Dry Input 3 Function	D3-SG Function	x	0 - None 1 - Enable 2 - Fireman's Override (H) 3 - Speed- A 4 - Speed- B 5 - Setpoint-A 6 - Setpoint-B 7 - Damper LSW (H) 8 - Flow Switch 9 - External Trip 10 - Run Forward 11 - Run Reverse 12 - 2nd Acc/Dec Time 13 - 3-Wire Start 14 - 3-Wire Stop 15 - HOA Auto 16 - HOA Hand 17 - Shutdown 18- Fault Reset 19- Bypass 20- Switch 1A to 3A
88	R/W	Dry Input 3 Contact	D3-SG Input	x	0 - Normally Open 1 - Normally Closed
89	R/W	Dry Input 4 Function	D4-SG Function	x	0 - None 1 - Enable 2 - Fireman's Override (H) 3 - Speed- A 4 - Speed- B 5 - Setpoint-A 6 - Setpoint-B 7 - Damper LSW (H) 8 - Flow Switch 9 - External Trip 10 - Run Forward 11 - Run Reverse 12 - 2nd Acc/Dec Time 13 - 3-Wire Start 14 - 3-Wire Stop 15 - HOA Auto 16 - HOA Hand 17 - Shutdown 18- Fault Reset 19- Bypass 20- Switch 1A to 3A
90	R/W	Dry Input 4 Contact	D4-SG Input	x	0 - Normally Open 1 - Normally Closed
91	R/W	Relay 3 Output Select	O3-O4-O5 Function	x	0 - Fault 1 - Run 2 - Proof of Run

BACnet Object Instance	Read/ Write	Full Parameter Name	OLED Display Name	Units	Parameter Setting Range
93	R	Bluetooth Error	Bluetooth Error	x	0 - None 1 - HW Comms Fail 2 - No "Adv Off" Rsp 3 - No "Cfg" Response 4 - No "Cfg Val" Rsp 5 - No "Write" Rsp 6 - No "Adv On" Rsp 7 - No "LNAME" Rsp 8 - No "SNAME" Rsp 9 - No "Disconnect" Rsp 10 - No "Satus Ok" Rsp 11 - No "Version" Rsp 12 - No "Transparent" Rsp 13 - No "Tx Comp" Rsp 14 - Unexpected Reset 15 - Unexpected Element 16 - Invalid Firmware 17 - No "Exit Trans" Rsp 18 - Procedure Overrun 19 - Not In Trans Mode 20 - No "LBD" Response 21 - No "DCN" Response 22 - FW Upgrade Failure

Positive Integer Objects:

BACnet Object Instance	Read/ Write	Full Parameter Name	OLED Display Name	Units	Parameter Setting Range
0	R/W	Rated Motor RPM	Motor RPM	1[RPM]	500 to 3600
1	R/W	Damper/Lube/ScreenClean Delay*	Damper Delay	[sec]	0 to 6000
2	R/W	Feedback Loss Delay *	Fdbk Loss Delay	1[Sec]	0 to 10
3	R/W	Motor Overload (MOL) Level Continuous	VFD MOL Continuous	[%]	50 to 135
4	R/W	2A Output Scaling	2A Output Scaling	1[%]	10 to 200
5	R/W	Stall Level	Stall Level	[%]	30 to 200%
6	R/W	Motor Overcurrent Level	Overcurrent Level	[%]	70 to 200
8	R/W	Critical Faults Number of Auto Retries	Crit Fault Retries	x	0 to 10
9	R/W	Critical Faults Retry Delay	Crit Fault Retry Delay	[Min]	1 to 360
11	R/W	Light Faults Number of Auto Retries	Light Fault Retries	x	0 to 10
12	R/W	Light Faults Retry Delay	Light Fault Retry Delay	[Min]	1 to 360
13	R	Motor Speed	Motor Speed	[RPM]	0 to 3600
14	R	Wattmeter	Wattmeter	[kWh]	0 to 4,294,967,295
15	R	Power-On Time	Power-On Time	Format	0 to 4,294,967,295
16	R	Run time	Motor Run Time	[sec]	0 to 4,294,967,295
19	R/W	BACnet Device Instance	BACnet Device	x	0-4194303
20	R/W	BACnet MAC/ID	BACnet MS/TP MAC Address	x	0 to 127
21	R/W	BACnet Max Master	BACnet MS/TP Max Master	x	0 to 127
40	R	Date/Time	Date		Date and time is formatted using the epoch time. This is the total number of seconds elapsed since 12:00 AM, January 1st, 1970.
41	W	Set Date/Time			
42	R	Serial Number	Serial Number		0 - 99,999,999

CHAPTER 12 - WARRANTY

Warranty

The Warranty period is 60 months after the date of invoice when used in a variable torque application. Detailed warranty terms and conditions are available from Franklin Control Systems or can be found at www.franklin-controls.com.

IN-WARRANTY service information

If the defective part has been identified under normal and proper use within the guarantee term, contact your local authorized Franklin Control Systems distributor or Franklin Control Systems Service center.

OUT-OF WARRANTY service information

Franklin Control Systems warranty will not be applied in the following cases, even if the guarantee term has not expired.

- Damage was caused due to misuse, negligence or accident.
- Damage was caused due to abnormal voltage and/or peripheral device malfunction (failure).
- Damage was caused due to improper repair or alteration by any individual or organization other than Franklin Control Systems authorized distributor or service center.
- Damage was caused due to earthquake, fire, flooding, lightning, or any other form of natural calamity.
- Franklin Control Systems nameplate is no longer attached.
- The warranty guarantee period has expired.

APPENDIX A – DE-RATING TABLE

DE-RATING:

The following de-ratings are established based on the ambient and adjustable carrier frequency. Where applicable, linear interpolation of the rated output current is allowed for carrier frequencies between 5kHz and 10kHz.

Model No.	INPUT	OUTPUT		Ambient Temperature (C)
	Amps (VT)	Amps (VT)	Carrier (KHz)	
QLNK-003-DV	2.4	3.0A	5.0	40
		3.0A	10.0	40
		3.0A	5.0	50
		3.0A	10.0	50
QLNK-005-DV	4.0	5.0A	5.0	40
		5.0A	10.0	40
		5.0A	5.0	50
		5.0A	10.0	50
QLNK-009-DV	7.2	9.0A	5.0	40
		9.0A	10.0	40
		9.0A	5.0	50
		9.0A	10.0	50
QLNK-012-DV	9.6	12.0A	5.0	40
		12.0A	10.0	40
		12.0A	5.0	50
		12.0A	10.0	50
QLNK-017-DV	13.6	17.0A	5.0	40
		17.0A	10.0	40
		17.0A	5.0	50
		13.0A	10.0	50
QLNK-024-DV	19.2	24.0A	5.0	40
		20.0A	10.0	40
		20.0A	5.0	50
		13.0A	10.0	50
QLNK-028-DV	22.4	28.0A	5.0	40
		20.0A	10.0	40
		20.0A	5.0	50
		13.0A	10.0	50

Thank you for choosing Franklin Control Systems, formerly Cerus Industrial.

franklin-controls.com | 1.800.962.3787